HENSEL



WP 0202 G

IP 66/68 69 | ≤ 20 m ≤ 168 h | 2.5 mm² | DVE

- Cable junction box "Waterproof"
- with branch terminal
- dimensions H x W x D: 93 x 93 x 62 mm
- with metric knockouts

ELECTRICAL PROPERTIES

Rated insulation voltage: U_i = 690 V

Rated current: I_n = 20 A

CONNECTION DATA

Terminal cross-section:

Maximum number of conductors clamping units each	Conductor cross-section min.	Conductor cross-section max.	Conductor cross section	Conductor type	Conductor material
4	0.75 mm²	1 mm²	solid, stranded, flexible	round	Cu
3	1.5 mm²	1.5 mm²	solid, stranded, flexible	round	Cu
2	2.5 mm²	2.5 mm²	solid, stranded, flexible	round	Cu
1	4 mm²	4 mm²	solid, stranded, flexible	round	Cu

Number of clamping units per pole: 2

Gustav Hensel GmbH & Co. KG * Gustav-Hensel-Str. 6 * 57368 Lennestadt * Germany * Phone: +49 (0)2723/609-0

Connection type:	Screw connection
Ferrule required for flexible conductors:	No
Dismantling length:	10 mm
Tightening torque of the terminal:	0.5 Nm

CABLE ENTRIES

Cable entries:

Number of cable entries	Type of cable entry	Size of the metric knockouts	Position of cable entry
7	metric knockouts	M20	wall

MECHANICAL PROPERTIES

Type of lid fastening:	Quick locking: opening and closing by quarter turn, locked position well visible (open - locked)
Delivered accessories:	External brackets, sealing plug
IP degree of protection:	IP66, IP68, IP69 IP68: Permanent submersion, VDE-tested up to 20 m / 168 h IP69: water pressure max. 100 bar, water temperature max. 80 °C, distance ≥ 0.15 m
Impact strength:	IK09
Sealable without accessories:	Yes
Can be sealed:	Yes
Sealing compound supplied:	Yes

AMBIENT CONDITIONS

suitable for installation in ground without traffic loads

Application area:	Outdoor installation
Maximum ambient temperature 24 h:	55 °C
Ambient temperature:	-25 °C up to +70 °C
Relative humidity:	≤ 50 % at 40 °C, ≤ 100 % at 25 °C

MATERIAL PROPERTIES

Material:	Polycarbonate
Glow wire test according to IEC 60695-2-11:	960 °C
UL 94:	V-0
Temperature resistance:	-25 °C up to +100 °C
Halogen-free:	Yes
Silicone-free:	Yes

Gustav Hensel GmbH & Co. KG * Gustav-Hensel-Str. 6 * 57368 Lennestadt * Germany * Phone: +49 (0)2723/609-0

Weatherproof:	Yes (resistant to UV exposure due to solar radiation, ice and sea water, corrosion, temperature resistant, impact-resistant)

DIMENSIONS

Height:	93 mm
Width:	93 mm
Depth:	62 mm
Net weight:	0.597 kg

CERTIFICATES

conforming to the standards: DIN EN 60670-1/-22, IEC 60670-1/-22

Certificates:

Type of certificate	Certificate number
VDE	40045695

SALES DATA

Product number:	62000097
EAN:	4012591123514
Pack unit:	1
Customs tariff number:	85369010
ETIM class:	DYNAMIC: EC002600 - Box/housing for surface mounting on the wall/ceiling ETIM-8.0: EC002600 - Box/housing for surface mounting on the wall/ceiling ETIM-7.0: EC002600 - Box/housing for surface mounting on the wall/ceiling ETIM-6.0: EC002600 - Box/housing for surface mounting on the wall/ceiling ETIM-5.0: EC002600 - Box/housing for surface mounting on the wall/ceiling ETIM-4.0: EC002600 - Box/housing for surface mounting on the wall/ceiling

NOTE

durability of sealing compound to processing ≥ 12 months at a storage temperature of 5 - 50 °C
usable for heating cable / heating tape up to max. 70 °C surface temperature
included sealing compound GH 0350 and sealing plugs for the metric knockout to be opened for encapsulating

Gustav Hensel GmbH & Co. KG * Gustav-Hensel-Str. 6 * 57368 Lennestadt * Germany * Phone: +49 (0)2723/609-0

When installing through the base of the box, the sealing plugs must be inserted so that the sealing compound remains in the box.

TENDER TEXT

Cable junction boxes waterproof, for encapsulation, in accordance with DIN VDE V 0606-22-100, with built-in connecting terminal and metric knockouts. Suitable for indoor and unprotected outdoor installation in accordance with DIN VDE 0100, part 737. For ambient temperatures maximum value +70 °C and minimum value -25 °C, with relative humidity of up to 100 %. Material temperature resistance of -25 °C to +90 °C, burning behaviour according to IEC 60695-2-11 - glow wire test 960°C, UL Subject 94 V-0. Degree of protection IP 68. Rated insulation voltage: 690 V. Material: PC thermoplastics, weatherproof, halogen- and silicone-free. Colour: grey, RAL 7035. Make: HENSEL WP.
Rated cross-section: 0.75-2.5 mm², 5-pole terminal, dimensions HxWxD 93 x 93 x 62 mm

DRAWINGS

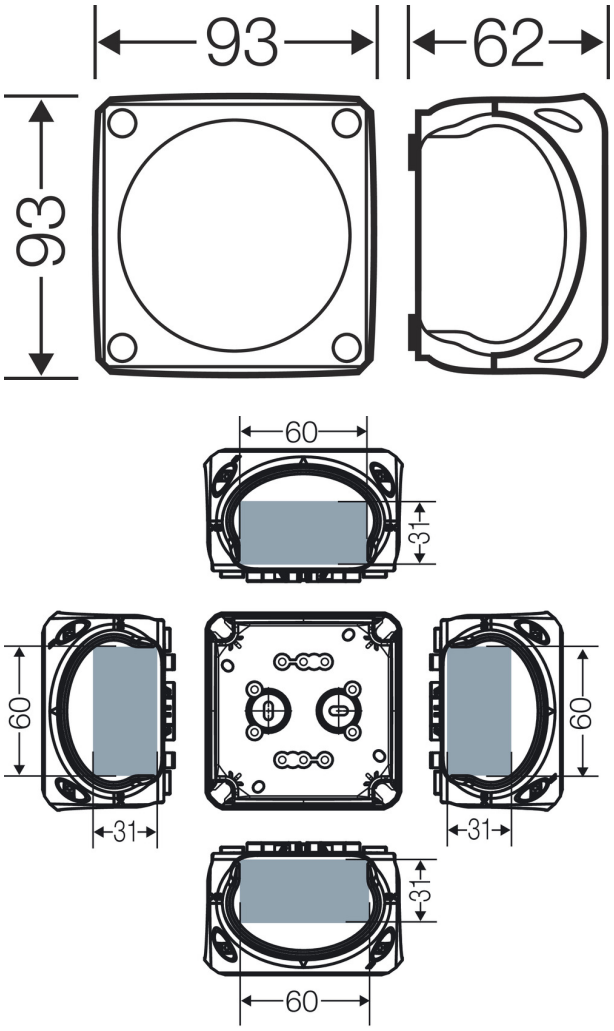

Gustav Hensel GmbH & Co. KG * Gustav-Hensel-Str. 6 * 57368 Lennestadt * Germany * Phone: +49 (0)2723/609-0

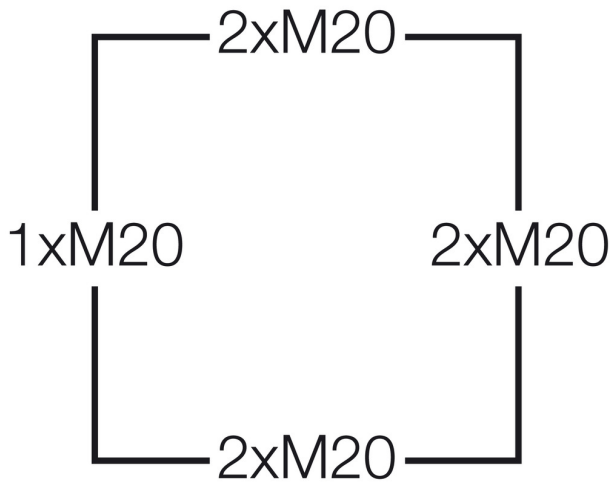

Gustav Hensel GmbH & Co. KG * Gustav-Hensel-Str. 6 * 57368 Lennestadt * Germany * Phone: +49 (0)2723/609-0