CABLOFIL
INNOVATORS IN CABLE MANAGEMENT

1, route de Semur - 21500 MONTBARD - France
Fax : 0 (+33) 3 80 92 09 67
www.cablofil.com

# CABLOBEND H54

Reference(s) : 220 /071/081/091/101/201/251/301/401/076/086/096/106/206/256/306/406/078/088/098/108/208/258/308/408/074/084/094/104/204/254/304/404

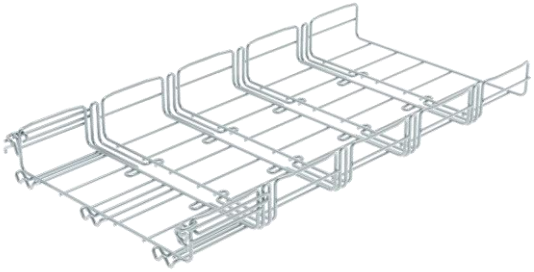

## 1. Brukesområde

Et automatisk koblings- og fleksibelt gitterbane-tilbehør som er kompatibelt med Fasclic+ og Cablofil gitterbaner

## 2. Utvalg

| Designation | W | | EZ | | | HR | | | SS304L | | | SS316L | | |
|---|---|---|---|---|---|---|---|---|---|---|---|---|---|---|
| | | | CODE | Weight | | CODE | Weight | | CODE | Weight | | CODE | Weight | |
| | (mm) | (inch) | | (Kg) | (LBS) | | (Kg) | (LBS) | | (Kg) | (LBS) | | (Kg) | (LBS) |
| CBB - 54/100 | 100 | 3,9 | 220071 | 0,6 | 0,3 | 220076 | 0,6 | 0,3 | 220078 | 0,6 | 0,3 | 220074 | 0,6 | 0,3 |
| CBB - 54/150 | 150 | 5,9 | 220081 | 0,8 | 0,4 | 220086 | 0,8 | 0,4 | 220088 | 0,8 | 0,4 | 220084 | 0,8 | 0,4 |
| CBB - 54/200 | 200 | 7,9 | 220091 | 1,0 | 0,5 | 220096 | 1,0 | 0,5 | 220098 | 1,0 | 0,5 | 220094 | 1,0 | 0,5 |
| CBB - 54/300 | 300 | 11,8 | 220101 | 1,5 | 0,7 | 220106 | 1,5 | 0,7 | 220108 | 1,5 | 0,7 | 220104 | 1,5 | 0,7 |
| CBB - 54/400 | 400 | 15,7 | 220201 | 2,8 | 1,3 | 220206 | 2,8 | 1,3 | 220208 | 2,8 | 1,3 | 220204 | 2,8 | 1,3 |
| CBB - 54/450 | 450 | 17,7 | 220251 | 3,4 | 1,5 | 220256 | 3,4 | 1,5 | 220258 | 3,4 | 1,5 | 220254 | 3,4 | 1,5 |
| CBB - 54/500 | 500 | 19,7 | 220301 | 3,6 | 1,7 | 220306 | 3,6 | 1,7 | 220308 | 3,6 | 1,7 | 220304 | 3,6 | 1,7 |
| CBB - 54/600 | 600 | 23,6 | 220401 | 4,6 | 2,1 | 220406 | 4,6 | 2,1 | 220408 | 4,6 | 2,1 | 220404 | 4,6 | 2,1 |

## 3. DIMENSIONS (mm/inch)

| Designation | W ext | | W | | H | | H int | | Step | | L | | Number of Basket | Ø Basket | | Ø Spring | | Ø Side coupler | | Ø Bottom coupler | | Ø Side and bottom wire | |
|---|---|---|---|---|---|---|---|---|---|---|---|---|---|---|---|---|---|---|---|---|---|---|---|
| | (mm) | (inch) | (mm) | (inch) | (mm) | (inch) | (mm) | (inch) | (mm) | (inch) | (mm) | (inch) | | (mm) | (inch) | (mm) | (inch) | (mm) | (inch) | (mm) | (inch) | (mm) | (inch) |
| CBB - 54/100 | 130 | 5,12 | 100 | 3,94 | 64 | 2,52 | 53 | 2,09 | 21 | 0,83 | 374 | 14,72 | 3 | 3,9 | 0,15 | 3,9 | 0,15 | 4,2 | 0,17 | 4,2 | 0,17 | 3,9 | 0,15 |
| CBB - 54/150 | 180 | 7,09 | 150 | 5,91 | 64 | 2,52 | 54 | 2,11 | 21 | 0,83 | 501 | 19,72 | 4 | 4,4 | 0,17 | 3,9 | 0,15 | 4,2 | 0,17 | 4,2 | 0,17 | 3,9 | 0,15 |
| CBB - 54/200 | 230 | 9,06 | 200 | 7,87 | 64 | 2,52 | 54 | 2,11 | 23 | 0,91 | 507 | 19,96 | 4 | 4,4 | 0,17 | 4,4 | 0,17 | 4,2 | 0,17 | 4,2 | 0,17 | 3,9 | 0,15 |
| CBB - 54/300 | 330 | 12,99 | 300 | 11,81 | 64 | 2,52 | 54 | 2,11 | 23 | 0,91 | 634 | 24,96 | 5 | 4,4 | 0,17 | 4,4 | 0,17 | 4,2 | 0,17 | 4,2 | 0,17 | 3,9 | 0,15 |
| CBB - 54/400 | 435 | 17,13 | 400 | 15,75 | 64 | 2,52 | 54 | 2,13 | 23 | 0,91 | 768 | 30,24 | 6 | 5,5 | 0,22 | 4,9 | 0,19 | 4,7 | 0,19 | 4,7 | 0,19 | 3,9 | 0,15 |
| CBB - 54/450 | 485 | 19,09 | 450 | 17,72 | 64 | 2,52 | 54 | 2,13 | 23 | 0,91 | 897 | 35,31 | 7 | 5,5 | 0,22 | 4,9 | 0,19 | 4,7 | 0,19 | 4,7 | 0,19 | 3,9 | 0,15 |
| CBB - 54/500 | 535 | 21,06 | 500 | 19,69 | 64 | 2,52 | 54 | 2,13 | 23 | 0,91 | 897 | 35,31 | 7 | 5,5 | 0,22 | 4,9 | 0,19 | 4,7 | 0,19 | 4,7 | 0,19 | 3,9 | 0,15 |
| CBB - 54/600 | 635 | 25,00 | 600 | 23,62 | 64 | 2,52 | 54 | 2,13 | 23 | 0,91 | 1025 | 40,35 | 8 | 5,5 | 0,22 | 4,9 | 0,19 | 4,7 | 0,19 | 4,7 | 0,19 | 3,9 | 0,15 |

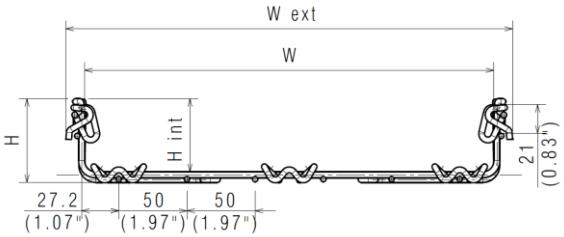


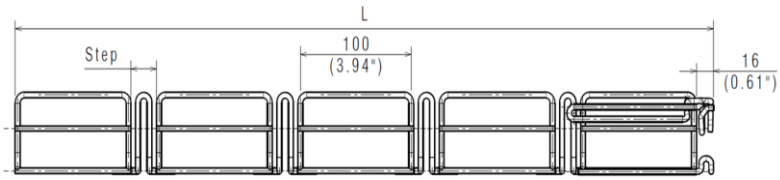


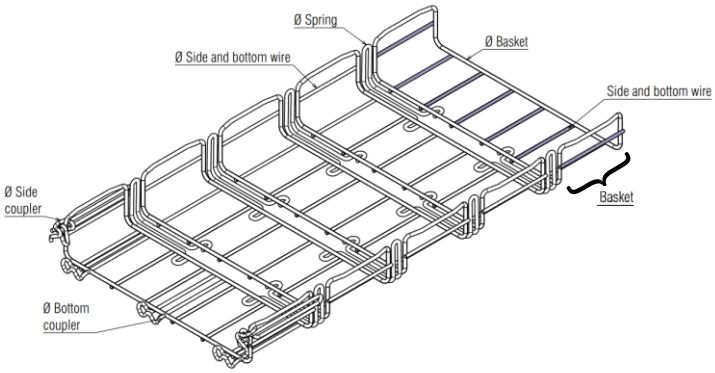

CBB 54/100 – 220 071

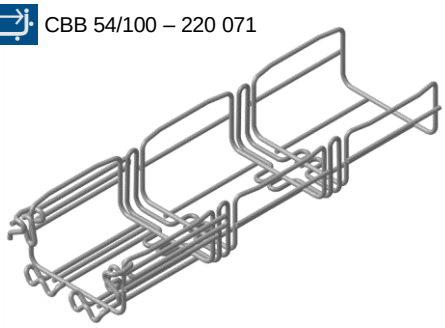

CBB 54/150 – 220 081

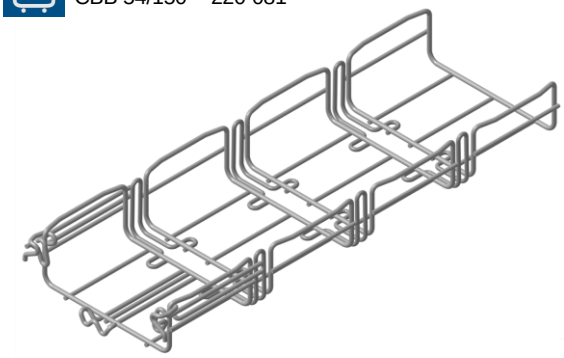

CBB 54/200 – 220 091

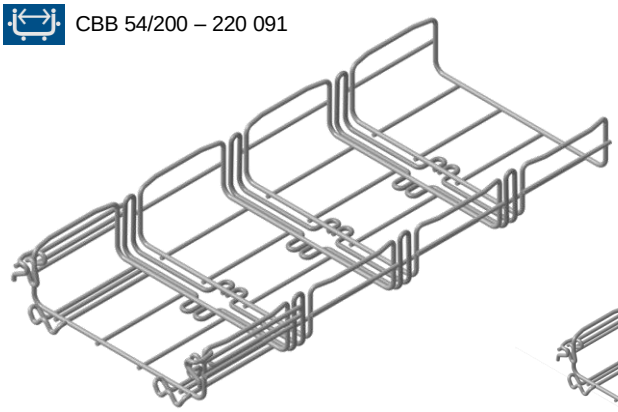

CBB 54/300 – 220 101

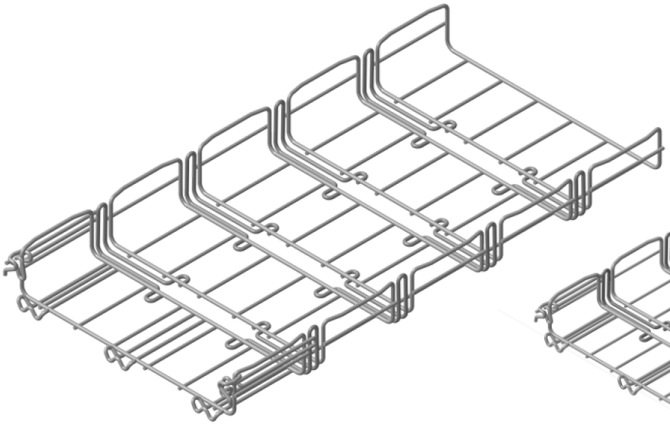

CBB 54/400 – 220 201

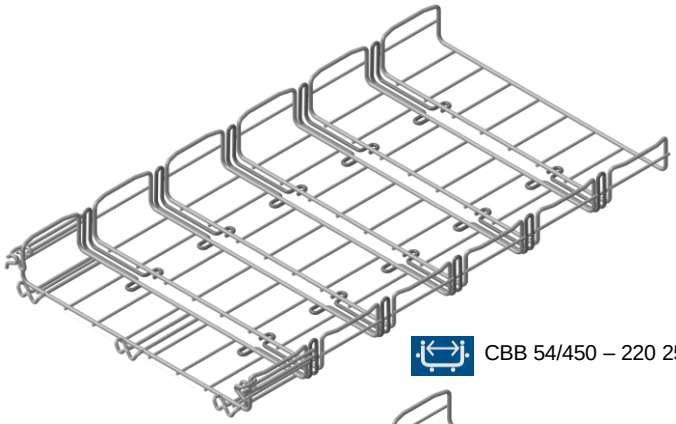

CBB 54/450 – 220 251

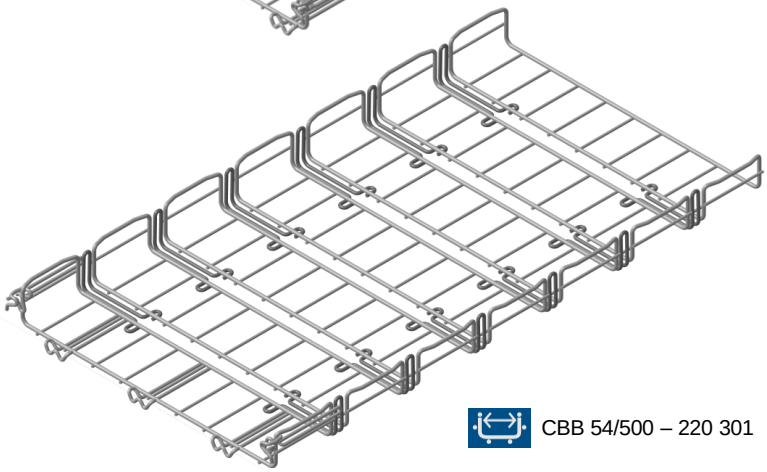

CBB 54/500 – 220 301

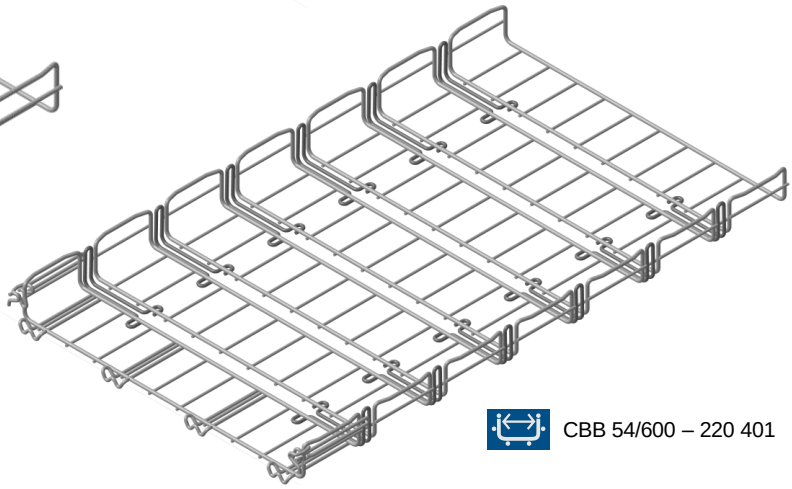

CBB 54/600 – 220 401

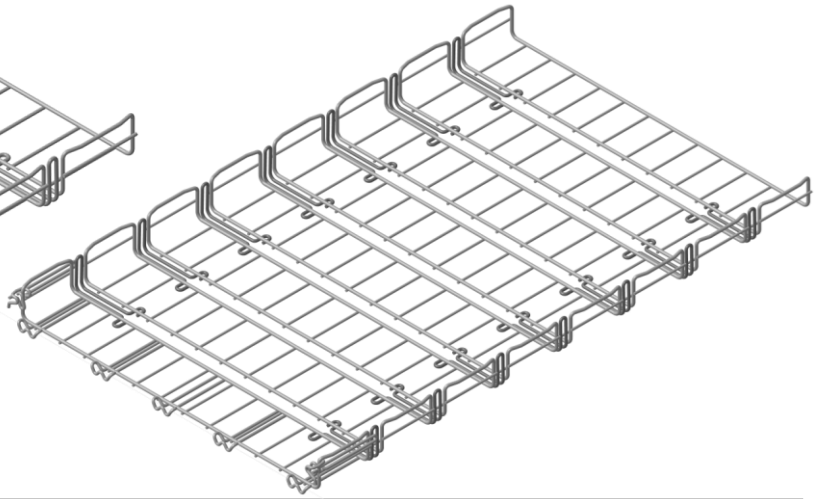

## 4. INSTALLATION

### ■ 4.1 FC+/CF

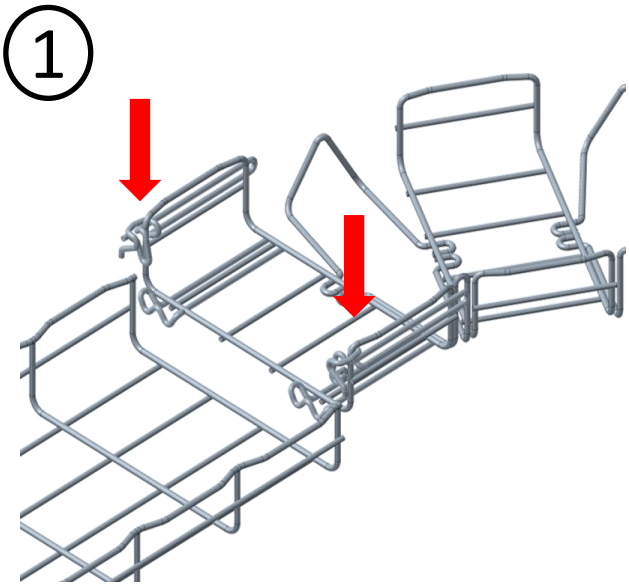


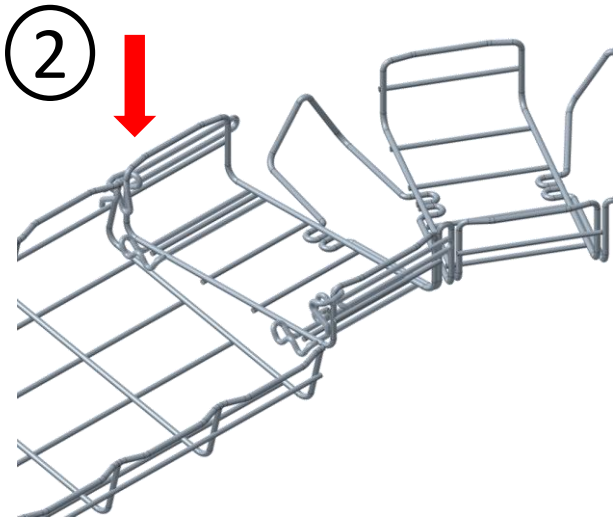


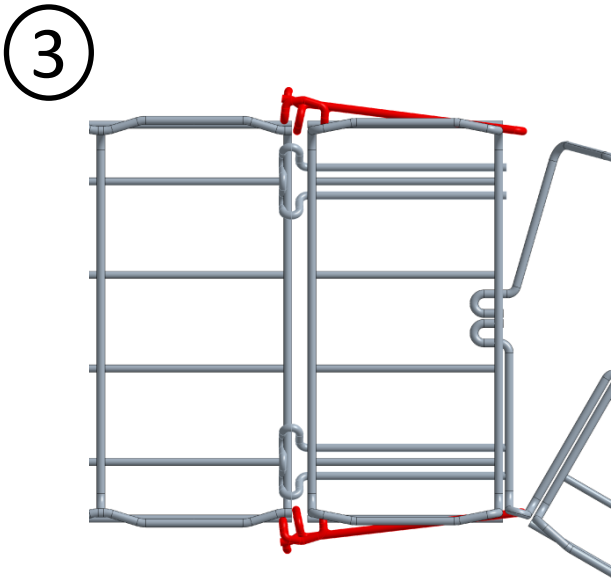


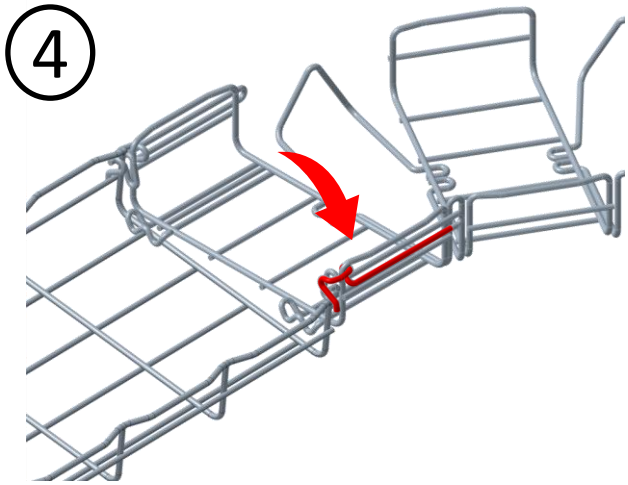


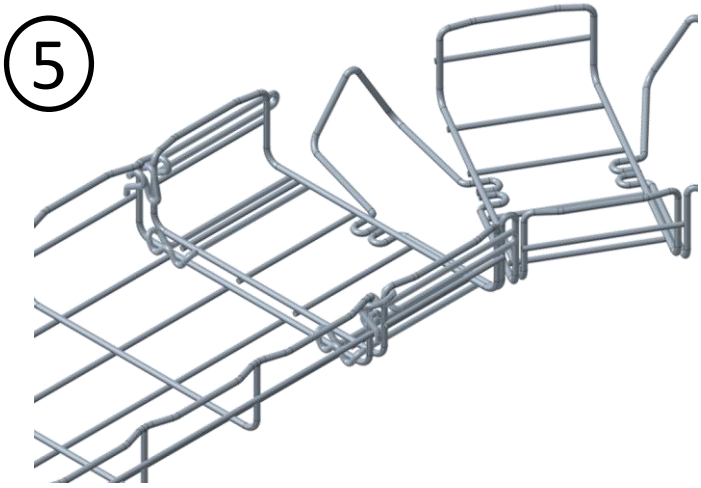

## ■ 4.2 Flat Bend

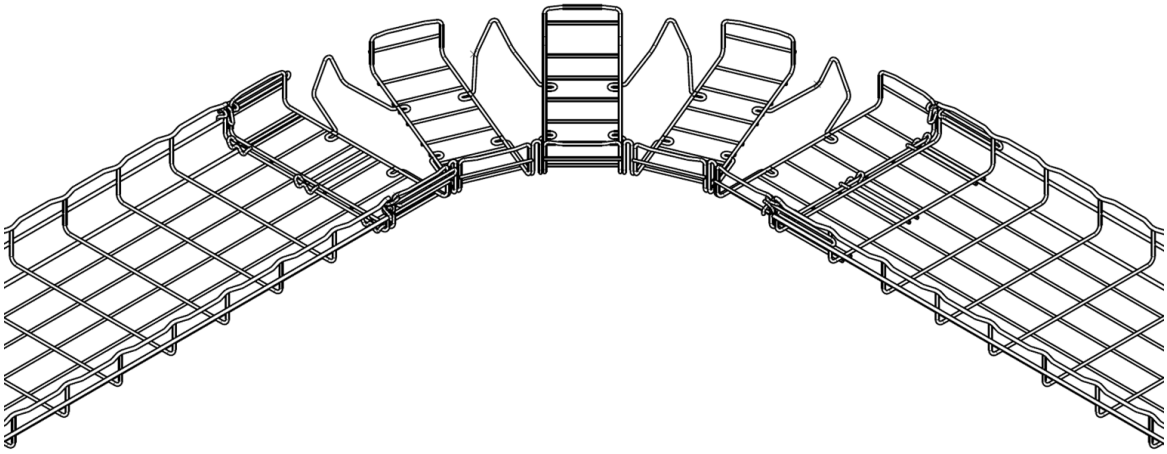

### ■ 4.2.1 90° Configuration

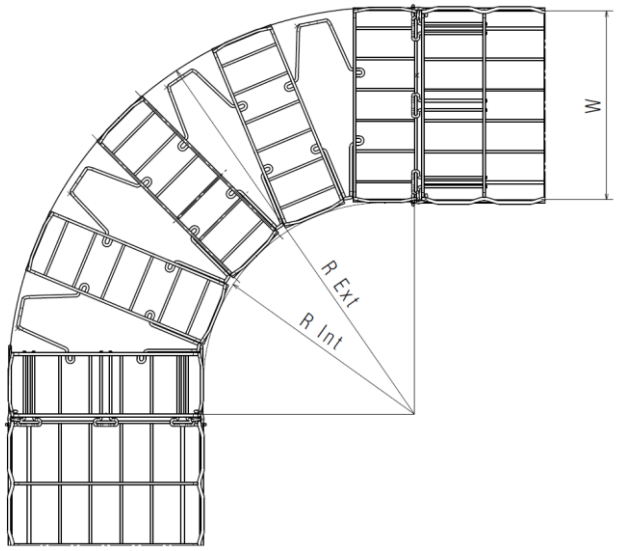


* Following dimensions refer to Flat Bend 90° configuration only

| Width | | Internal Radius | | External Radius | |
|---|---|---|---|---|---|
| W | | R Int | | R Ext | |
| (mm) | (inch) | (mm) | (inch) | (mm) | (inch) |
| 100 | 3,94 | 225 | 8,86 | 325 | 12,80 |
| 150 | 5,91 | 295 | 11,61 | 445 | 17,52 |
| 200 | 7,87 | 295 | 11,61 | 495 | 19,49 |
| 300 | 11,81 | 370 | 14,57 | 670 | 26,38 |
| 400 | 15,75 | 440 | 17,32 | 840 | 33,07 |
| 450 | 17,72 | 510 | 20,08 | 960 | 37,80 |
| 500 | 19,69 | 510 | 20,08 | 1010 | 39,76 |
| 600 | 23,62 | 600 | 23,62 | 1200 | 47,24 |

### ■ 4.2.2 Maximum angles configuration

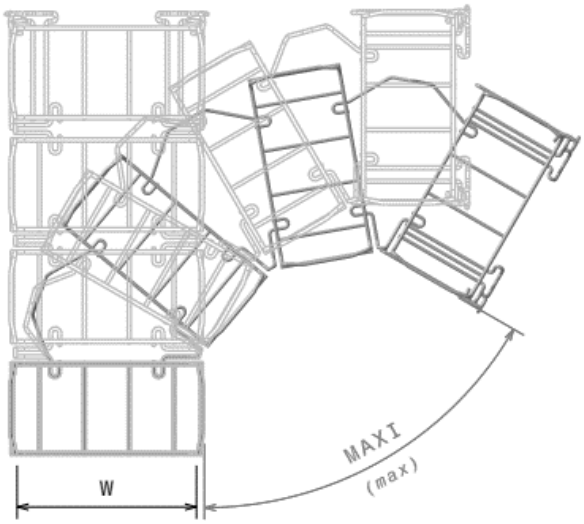


| Width | | Angle | |
|---|---|---|---|
| W | | MAXI | |
| (mm) | (inch) | (Degrees) | (Radians) |
| 100 | 3,94 | 120 | 2,09 |
| 150 | 5,91 | 120 | 2,09 |
| 200 | 7,87 | 120 | 2,09 |
| 300 | 11,81 | 110 | 1,92 |
| 400 | 15,75 | 110 | 1,92 |
| 450 | 17,72 | 110 | 1,92 |
| 500 | 19,69 | 110 | 1,92 |
| 600 | 23,62 | 110 | 1,92 |

■ **4.2.3 Clever configuration**

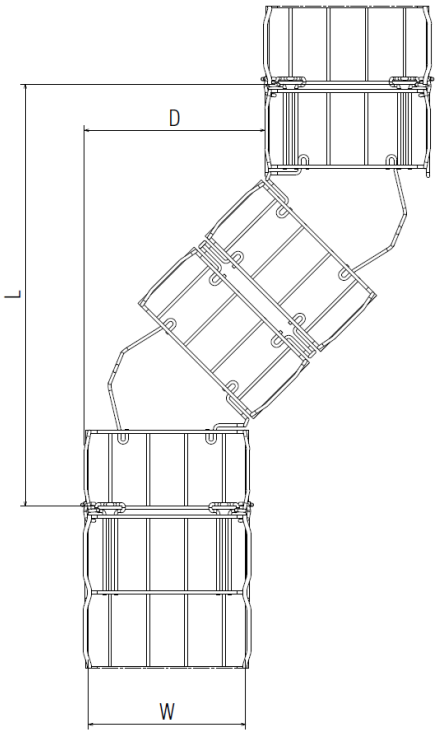


| Width | | Distance | | Length | |
|---|---|---|---|---|---|
| W | | D | | L | |
| (mm) | (inch) | (mm) | (inch) | (mm) | (inch) |
| 100 | 3,94 | 85 | 3,35 | 415 | 16,34 |
| 150 | 5,91 | 175 | 6,89 | 550 | 21,65 |
| 200 | 7,87 | 175 | 6,89 | 600 | 23,62 |
| 300 | 11,81 | 200 | 7,87 | 710 | 27,95 |
| 400 | 15,75 | 200 | 7,87 | 900 | 35,43 |
| 450 | 17,72 | 260 | 10,24 | 1030 | 40,55 |
| 500 | 19,69 | 260 | 10,24 | 1080 | 42,52 |
| 600 | 23,62 | 260 | 10,24 | 1175 | 46,26 |

■ **4.2.4 Double 90° configuration**

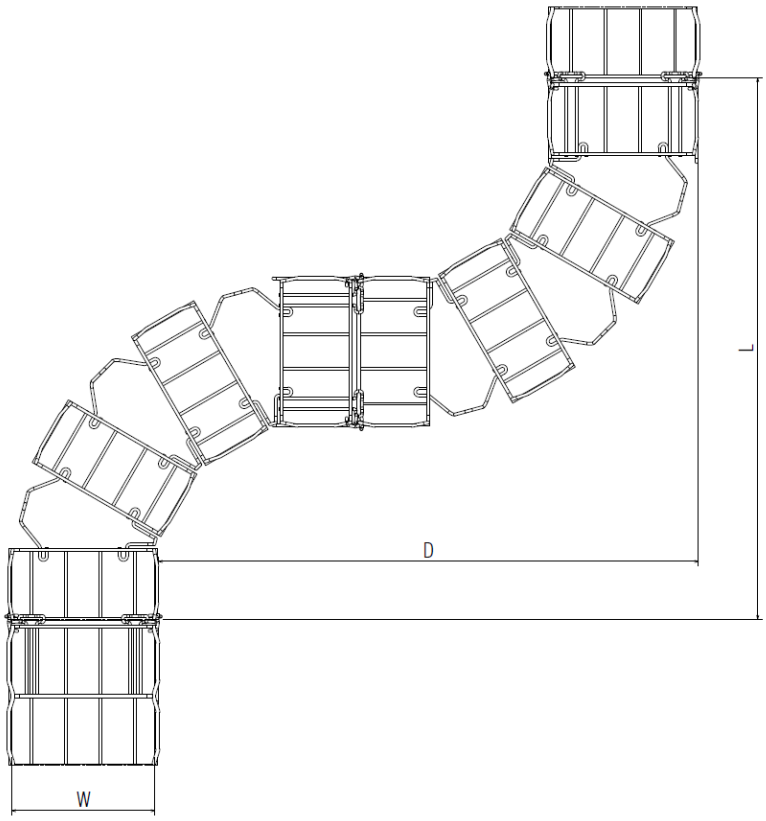


| Width | | Distance/Length | |
|---|---|---|---|
| W | | D/L | |
| (mm) | (inch) | (mm) | (inch) |
| 100 | 3,94 | 550 | 21,65 |
| 150 | 5,91 | 740 | 29,13 |
| 200 | 7,87 | 790 | 31,10 |
| 300 | 11,81 | 1040 | 40,94 |
| 400 | 15,75 | 1280 | 50,39 |
| 450 | 17,72 | 1470 | 57,87 |
| 500 | 19,69 | 1520 | 59,84 |
| 600 | 23,62 | 1800 | 70,87 |

■ **4.2.5 Duo Clever Configurations**

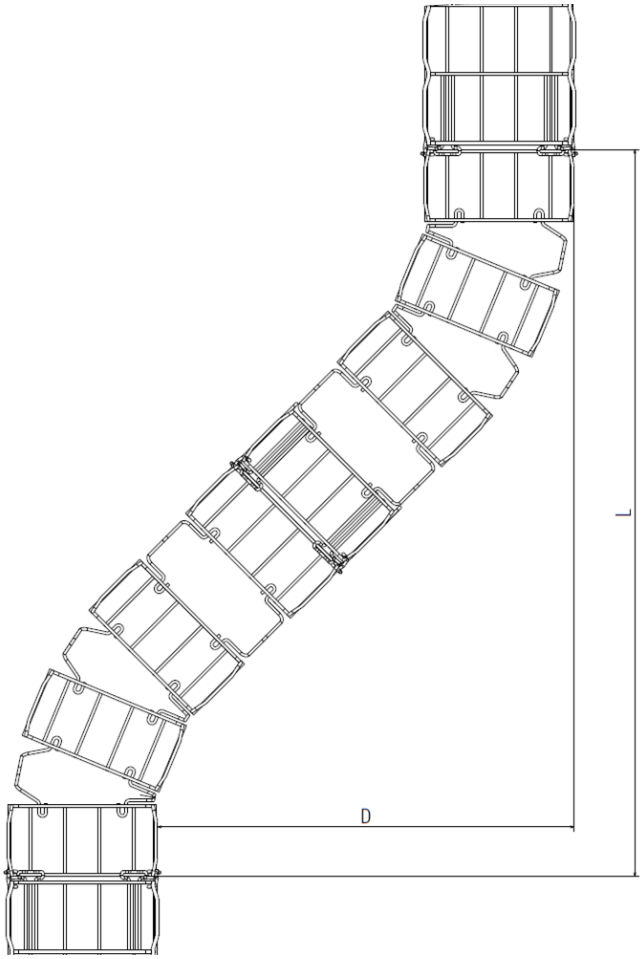


| Width | | Distance | | Length | |
|---|---|---|---|---|---|
| W | | D | | L | |
| (mm) | (inch) | (mm) | (inch) | (mm) | (inch) |
| 100 | 3,94 | 295 | 11,61 | 710 | 27,95 |
| 150 | 5,91 | 400 | 15,75 | 1010 | 39,76 |
| 200 | 7,87 | 600 | 23,62 | 1060 | 41,73 |
| 300 | 11,81 | 700 | 27,56 | 1330 | 52,36 |
| 400 | 15,75 | 850 | 33,46 | 1660 | 65,35 |
| 450 | 17,72 | 960 | 37,80 | 1920 | 75,59 |
| 500 | 19,69 | 975 | 38,39 | 1950 | 76,77 |
| 600 | 23,62 | 1100 | 43,31 | 2250 | 88,58 |

## 4.3 Inside Riser

* Following dimensions refer to Inside Riser 90° configuration only

| Width | | Internal Radius | | External Radius | |
|---|---|---|---|---|---|
| W | | R Int | | R Ext | |
| (mm) | (inch) | (mm) | (inch) | (mm) | (inch) |
| 100 | 3,94 | 186 | 7,32 | 250 | 9,84 |
| 150 | 5,91 | 281 | 11,06 | 345 | 13,58 |
| 200 | 7,87 | 281 | 11,06 | 345 | 13,58 |
| 300 | 11,81 | 366 | 14,41 | 430 | 16,93 |
| 400 | 15,75 | 436 | 17,17 | 500 | 19,69 |
| 450 | 17,72 | 516 | 20,31 | 580 | 22,83 |
| 500 | 19,69 | 516 | 20,31 | 580 | 22,83 |
| 600 | 23,62 | 596 | 23,46 | 660 | 25,98 |

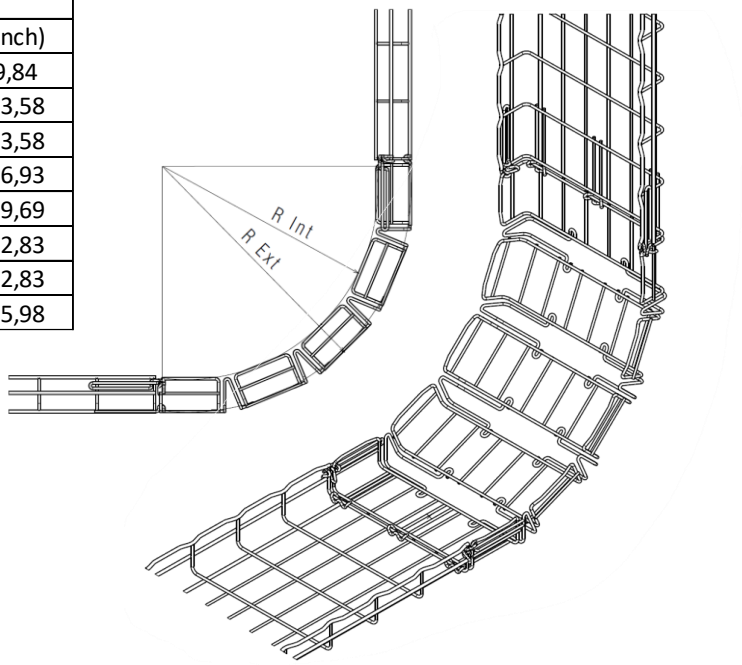


## 4.4 Outside Riser

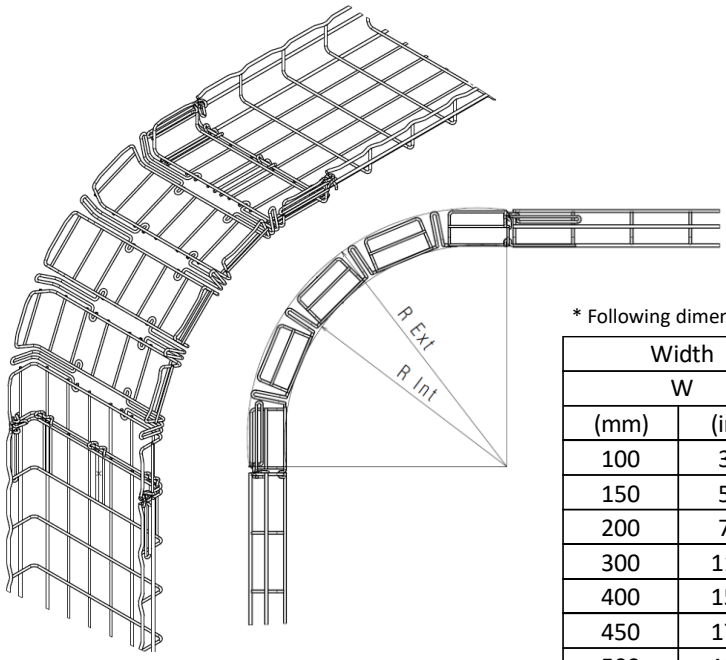


* Following dimensions refer to Outside Riser 90° configuration only

| Width | | Internal Radius | | External Radius | |
|---|---|---|---|---|---|
| W | | R Int | | R Ext | |
| (mm) | (inch) | (mm) | (inch) | (mm) | (inch) |
| 100 | 3,94 | 200 | 7,87 | 264 | 10,39 |
| 150 | 5,91 | 370 | 14,57 | 434 | 17,09 |
| 200 | 7,87 | 370 | 14,57 | 434 | 17,09 |
| 300 | 11,81 | 390 | 15,35 | 454 | 17,87 |
| 400 | 15,75 | 485 | 19,09 | 549 | 21,61 |
| 450 | 17,72 | 560 | 22,05 | 624 | 24,57 |
| 500 | 19,69 | 560 | 22,05 | 624 | 24,57 |
| 600 | 23,62 | 610 | 24,02 | 674 | 26,54 |

■ **4.5 Flexible Riser**

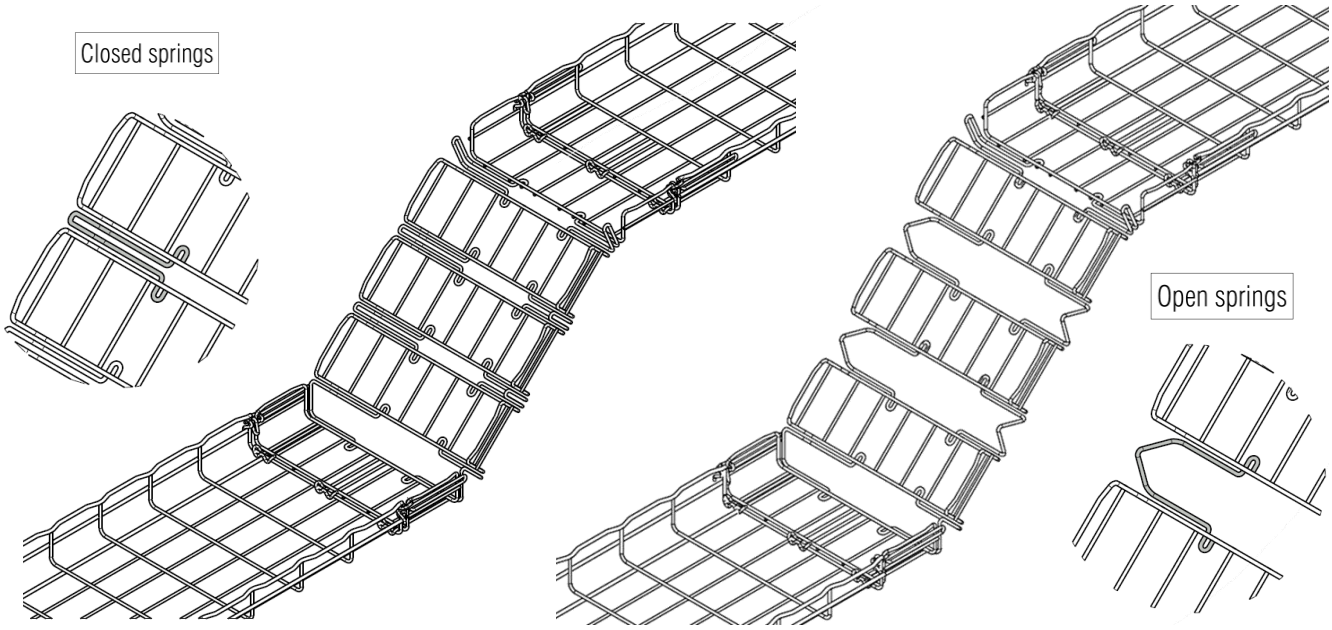


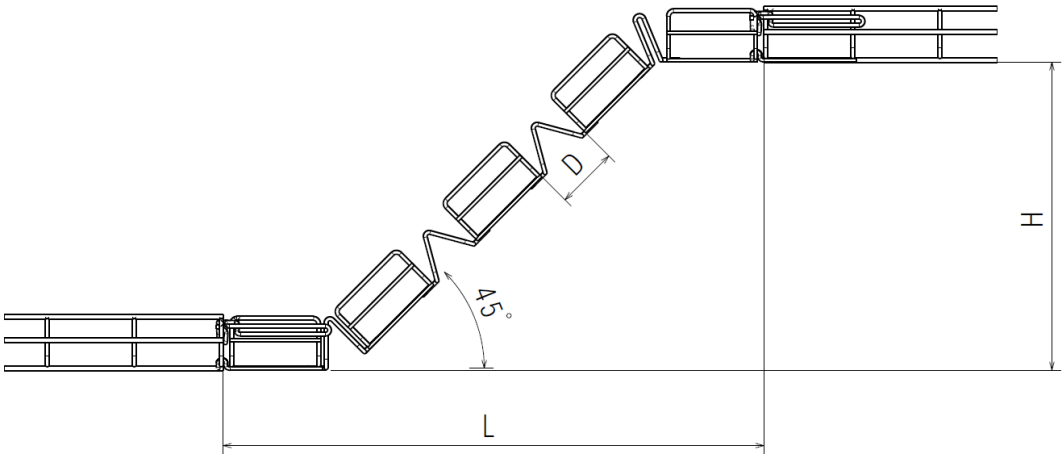


| W | | Number of Basket | Mode | D distance | | L | | H | |
|---|---|---|---|---|---|---|---|---|---|
| (mm) | (inch) | | | (mm) | (inch) | (mm) | (inch) | (mm) | (inch) |
| 100 | 3,94 | 3 | Closed springs | --- | --- | 373 | 14,69 | 109 | 4,29 |
| | | | Open springs | | | | | | |
| 150 | 5,91 | 4 | Closed springs | 23 | 0,91 | 463 | 18,23 | 199 | 7,83 |
| | | | Open springs | 71 | 2,80 | 497 | 19,57 | 233 | 9,17 |
| 200 | 7,87 | 4 | Closed springs | 23 | 0,91 | 463 | 18,23 | 199 | 7,83 |
| | | | Open springs | 71 | 2,80 | 497 | 19,57 | 233 | 9,17 |
| 300 | 11,81 | 5 | Closed springs | 23 | 0,91 | 554 | 21,81 | 289 | 11,38 |
| | | | Open springs | 71 | 2,80 | 621 | 24,45 | 357 | 14,06 |
| 400 | 15,75 | 6 | Closed springs | 23 | 0,91 | 644 | 25,35 | 379 | 14,92 |
| | | | Open springs | 71 | 2,80 | 745 | 29,33 | 481 | 18,94 |
| 450 | 17,72 | 7 | Closed springs | 23 | 0,91 | 734 | 28,90 | 469 | 18,46 |
| | | | Open springs | 71 | 2,80 | 869 | 34,21 | 605 | 23,82 |
| 500 | 19,69 | 7 | Closed springs | 23 | 0,91 | 734 | 28,90 | 469 | 18,46 |
| | | | Open springs | 71 | 2,80 | 869 | 34,21 | 605 | 23,82 |
| 600 | 23,62 | 8 | Closed springs | 23 | 0,91 | 824 | 32,44 | 559 | 22,01 |
| | | | Open springs | 71 | 2,80 | 994 | 39,13 | 729 | 28,70 |

## ■ 4.6 CE35 as an internal radius

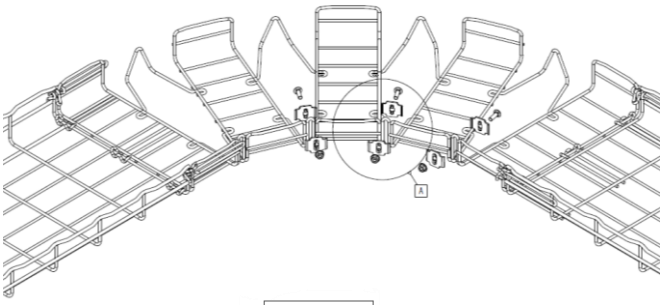

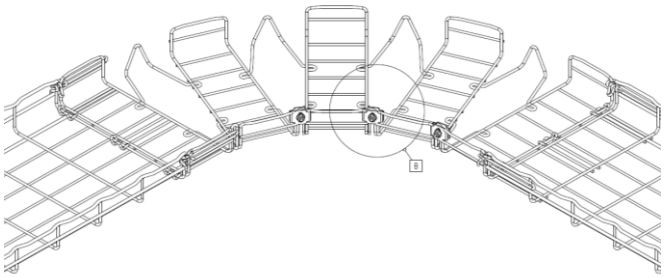

558 180 (PG)

Detail A

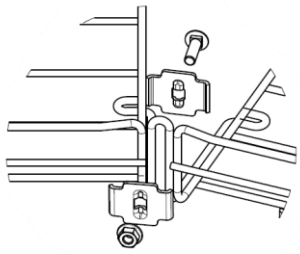

| Width W (mm) | Width W (inch) | Number of CE35 on internal |
|---|---|---|
| 100 | 3,64 | 1 |
| 150 | 5,91 | 2 |
| 200 | 7,87 | 2 |
| 300 | 11,81 | 3 |
| 400 | 15,57 | 4 |
| 450 | 17,72 | 5 |
| 500 | 19,69 | 5 |
| 600 | 23,62 | 6 |

Detail B

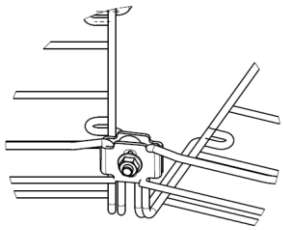

## ■ 4.7 Reinforcement Strip as an external radius

Fixed by a CE35

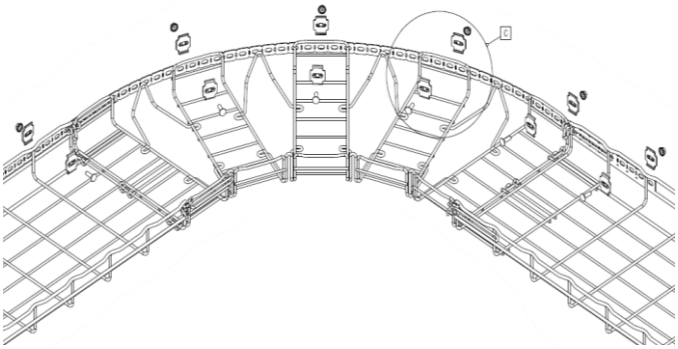

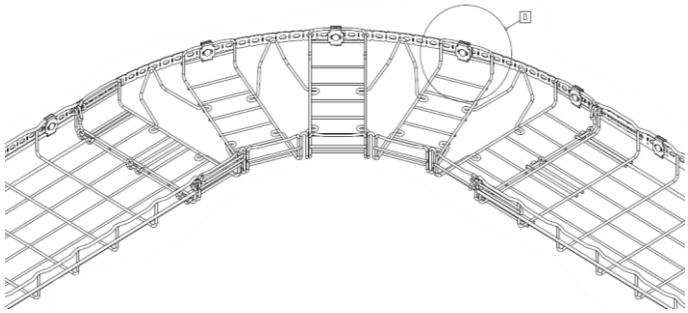

350 461 (PG)

Detail C

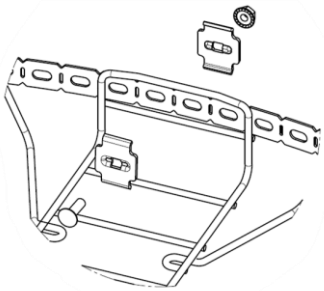

| Width W (mm) | Width W (inch) | Number of CE35 on external radius |
|---|---|---|
| 100 | 3,64 | 4 |
| 150 | 5,91 | 5 |
| 200 | 7,87 | 5 |
| 300 | 11,81 | 6 |
| 400 | 15,57 | 7 |
| 450 | 17,72 | 8 |
| 500 | 19,69 | 8 |
| 600 | 23,62 | 9 |

Detail D

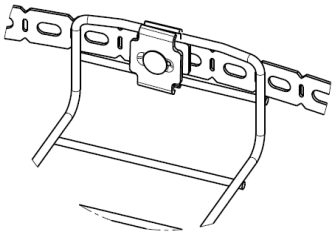

■ **4.8 Installation Wall / Ceiling**

Dimensions to be left that allow assembly with Wall and Ceiling

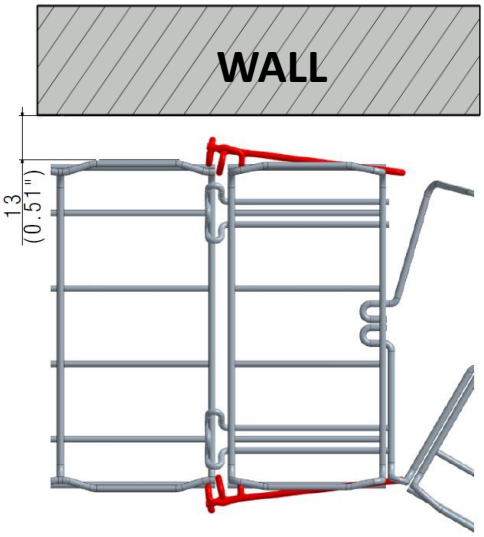


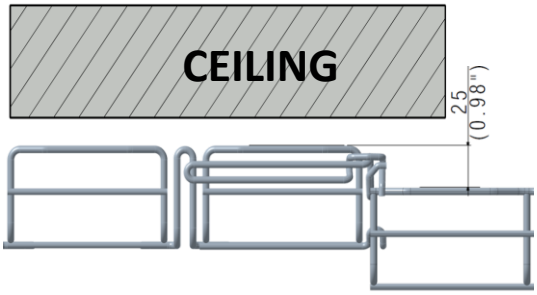


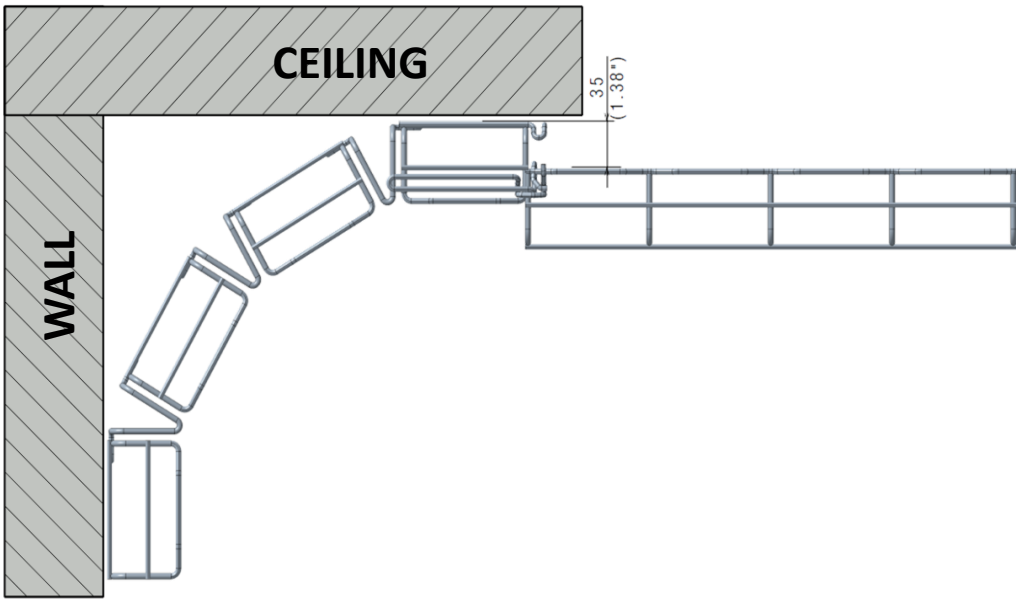


## 5. TECHNICAL DATA

■ **5.1 Material characteristics**

| Material finish | Resistance class against corrosion | Material | Material standard |
|---|---|---|---|
| EZ | Class 3 / IEC 61537 | C9D | EN ISO 1 61 20-2 |
| HR | Class 8 / IEC 61537 | C9D | EN ISO 1 61 20-2 |
| SS304L | Class 9C/IEC 61537 | X2 Cr Ni 18-9 | EN 10 088-3 |
| SS316L | Class 9D/IEC 61537 | X2 Cr Ni Mo 17-12-2 | EN 10 088-3 |

■ **5.2 Climatic characteristics**

Storage and operating temperature : - 20° C à + 120° C

## 6. COMFORMITIES

**Electrical continuity**

■ Following IEC 61537

Comply with IEC 61537 Cable tray system

## 7. CAPACITY

### CBB 54 CABLOBEND SETUP

| H↕ mm | ℓ ↔ mm | F (daN/m) | Possible configuration of installation | |
|---|---|---|---|---|
| | | | Version 1 | Version 2 |
| 54 | 100 | 14 | ❶ | - |
| | 150 | 20 | ❶ | ❸ |
| | 200 | 28 | ❸ | ❹ |
| | 300 | 41 | ❷ + ❸ | ❹ |
| | 400 | 54 | ❷ + ❺ | ❻ |
| | 450 | 61 | ❷ + ❸ + ❺ | ❻ |
| | 500 | 68 | ❷ + ❸ + ❺ | ❻ |
| | 600 | 81 | ❷ + ❸ + ❺ | ❻ |

### ❶ - CBB

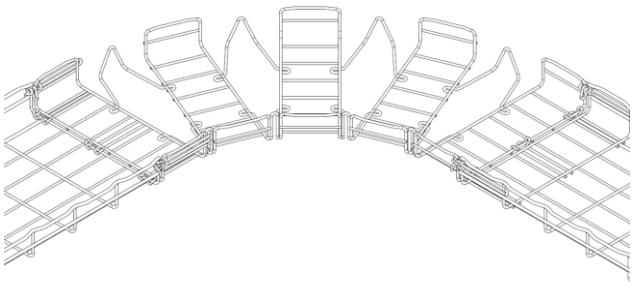

CBB: 220 101 (EZ)

### ❷ - CBB + CE35 on inside radius

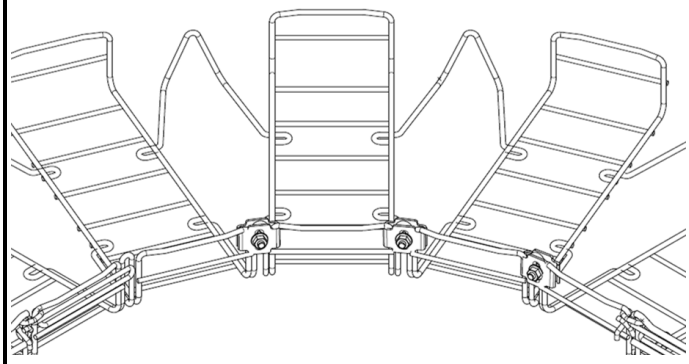

CE35 : 558 180 (PG)

### ❸ - CBB + RE + CE 35 on outside radius

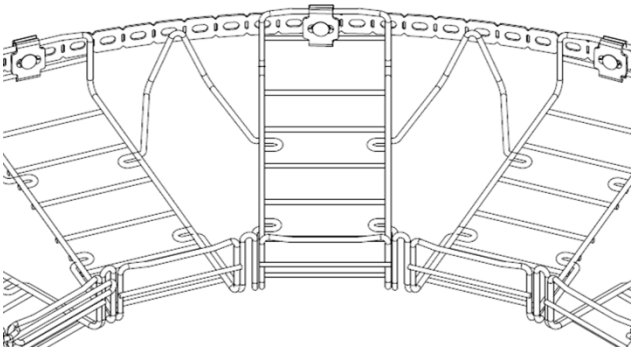

RE: 350 461 (PG) - CE35 : 558 180 (PG)

### ❹ - CBB + external support (e.g. threaded rod)

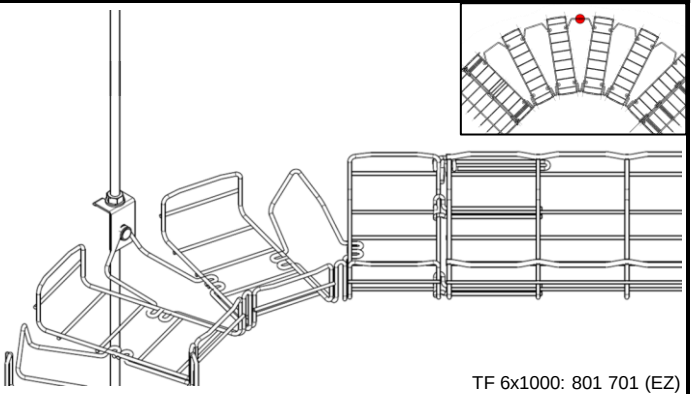

TF 6x1000: 801 701 (EZ)

### ❺ - CBB + R41SP + TF

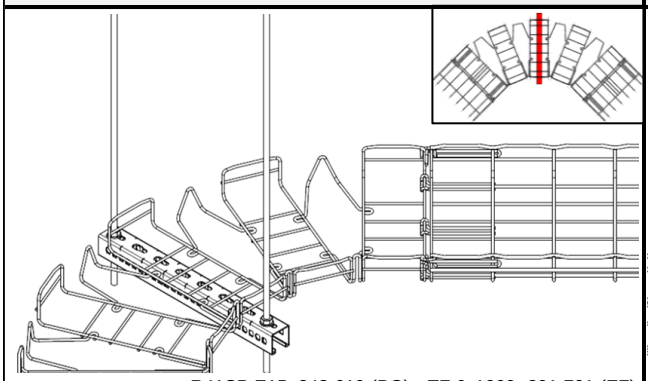

R41SP E15: 343 610 (PG) - TF 6x1000: 801 701 (EZ)

### ❻ - CBB + R41SP + TF

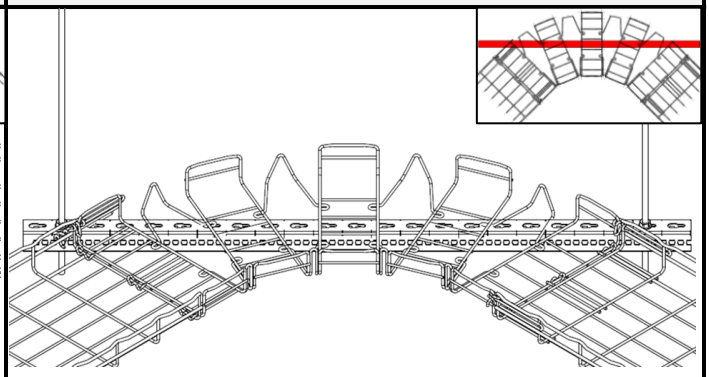

R41SP E15: 343 610 (PG) - TF 6x1000: 801 701 (EZ)