Product Data sheet

Part no.	Name	Type
73701	Cable Ladder FOE-70 CL-300-3 FRP	FOE-70 CL-300-3000

Description: Composite cable ladder certified for NEMA 8A loading.



Additional information: Composites are lightweight and do not rust. All of our products are available with a range of resin systems to fit your fire, anti-static and chemical resistance needs.

Characteristics

Name	Value
Weight (kg)	6.3
S Spacing (mm)	150
CC1 (mm)	25
F Flange (mm)	21
B Hole Size (mm)	6.5x20
A Hole Size (mm)	7
T1 Material Thickness (mm)	2.5
L Length (mm)	3000
W1 Width 1 (mm)	300
W2 Width 2 (mm)	318
R.S Rung Spacing (mm)	300
D Loading depth (mm)	46
H Height (mm)	70
T Material Thickness (mm)	4.0
X (mm)	37
Y (mm)	20

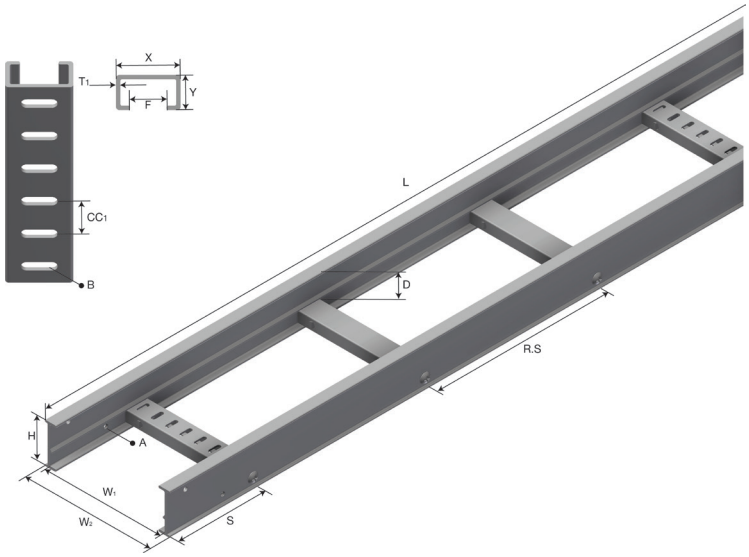

Product packaging information

F-PAK GTIN	**Single piece**	
D-PAK GTIN		