SIEMENS

Data sheet 8GK1423-8KK45

ALPHA 1250, Floor-mounted cabinet, with open side wall, IP55, Protection class 1, H: 1950 mm, W: 1050 mm, T: 400 mm, RAL 7035

Model	
product brand name	ALPHA 1250
Product designation	Free-standing cabinet
Design of the product	With open side panel
Surface processing	powder-coated

Protection class	
Protection class IP	IP55
Suitability for interaction / lightning protection	Yes
suitability for use / for outside use	No

Appearance	
RAL color number	7035
• product component / cable entry	Yes
• Product component / Mounting plate	No
Product extension / optional / Side-by-side mounting	Yes

Mechanical Design	
Height	1 950 mm
Width	1 050 mm
Depth	400 mm

Subject to change without notice
© Copyright Siemens

installation depth	400 mm
net weight	77.5 kg
material / of the enclosure	Steel

Certificates

• reference code / acc. to DIN EN 61346-2	U
• Reference code / acc. to DIN EN 81346-2	UC

General Product Approval		Declaration of Conformity	Test Certificates	other
VDE	Miscellaneous	EG-Konf.	Special Test Certificate	Miscellaneous

Further information

Information- and Downloadcenter (Catalogs, Brochures,…)
http://www.siemens.com/lowvoltage/catalogs

Industry Mall (Online ordering system)
https://mall.industry.siemens.com/mall/en/en/Catalog/product?mlfb=8GK1423-8KK45

Service&Support (Manuals, Certificates, Characteristics, FAQs,...)
https://support.industry.siemens.com/cs/ww/en/ps/8GK1423-8KK45

Image database (product images, 2D dimension drawings, 3D models, device circuit diagrams, ...)
http://www.automation.siemens.com/bilddb/cax_en.aspx?mlfb=8GK1423-8KK45

CAx-Online-Generator
http://www.siemens.com/cax

Tender specifications
http://www.siemens.com/specifications

Subject to change without notice
© Copyright Siemens

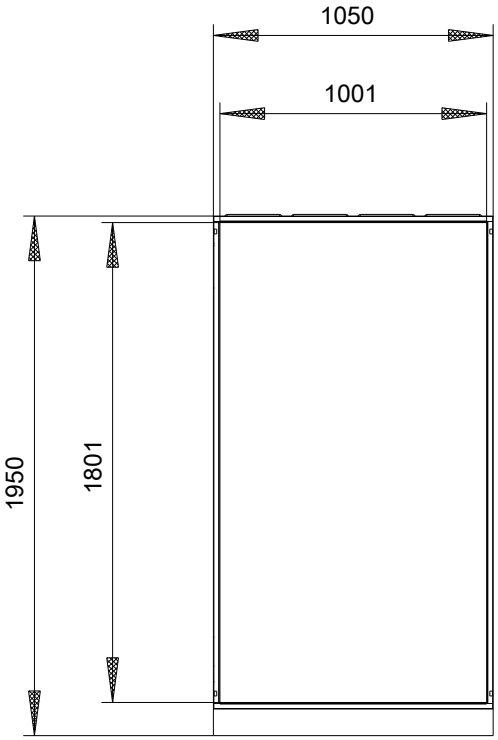

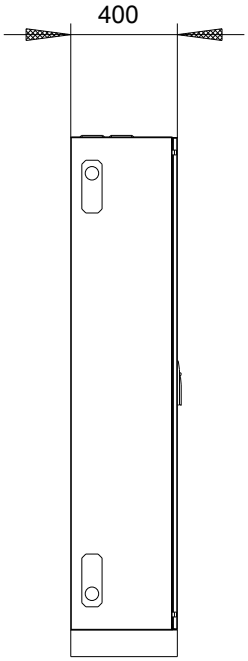

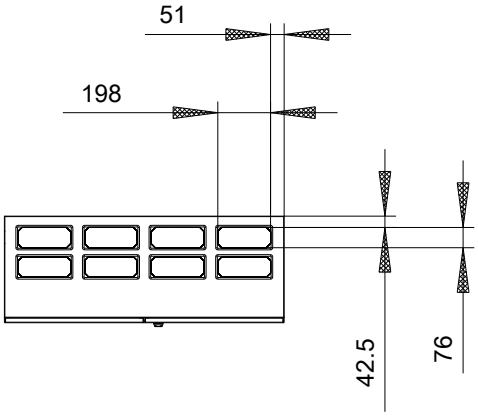

Subject to change without notice
© Copyright Siemens

Subject to change without notice
© Copyright Siemens