LED floodlight without sensor

XLED Protect

without motion detector - white
EAN 4007841 090005
Article number 090005

180° panorama light — 180° panoramic light
3000 K — 3000K warm-white
IP54
180° horizontal/ vertical
LED — 30 years (Ø 4,5h / day)
CE
energy saving
Light source not exchangeable
Control gear not exchangeable
CE

Function description

Technical specifications

Dimensions (L x W x H)	195 x 195 x 174 mm
With lamp	Yes, LED lamp
With motion detector	No
Manufacturer's Warranty	5 years
Version	without motion detector - white
PU1, EAN	4007841090005
Application, place	Outdoors
Application, room	garden, front door, courtyard & driveway, all round the building, terrace / balcony
Colour	white
Includes corner wall mount	No
Installation site	wall
Installation	Wall, Surface wiring
Impact resistance	IK03
IP-rating	IP54
Protection class	II
Ambient temperature	-20 – 40 °C
Cover material	Plastic, opal

Mains power supply	220 – 240 V / 50 – 60 Hz
Photo-cell controller	No
Luminous flux total product	1642 lm
Measured luminos flux (360°)	1642 lm
Total product efficiency	121 lm/W
Colour temperature	3000 K
Lamp	LED cannot be replaced
Service life LED L70B50 (25°)	> 60000 h
Soft light start	No
Basic light level function	No
Main light adjustable	No
Interconnection	No
Output	13,6 W
Colour Rendering Index CRI	= 82
R9-Farbwiedergabeindex	18
Product category	LED floodlight without sensor

XLED Protect

without motion detector - white
EAN 4007841 090005
Article number 090005

Accessories

EAN 4007841 053086	Corner wall mount XLED Home 2/ Pro 240
EAN 4007841 055875	Corner wall mount XLED home 2/ PRO 240
EAN 4007841 055615	Corner wall mount XLED home 2/ PRO 240

Dimension Drawing 1

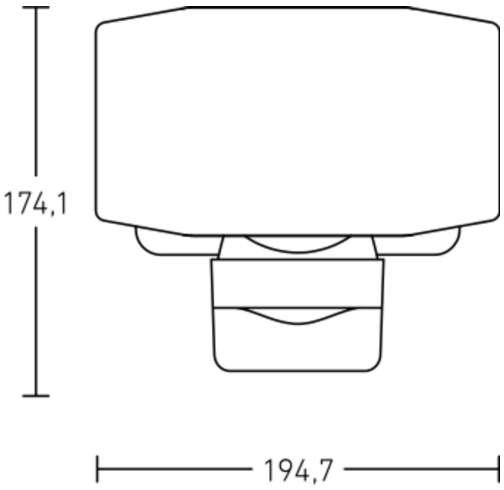

Dimension Drawing 2

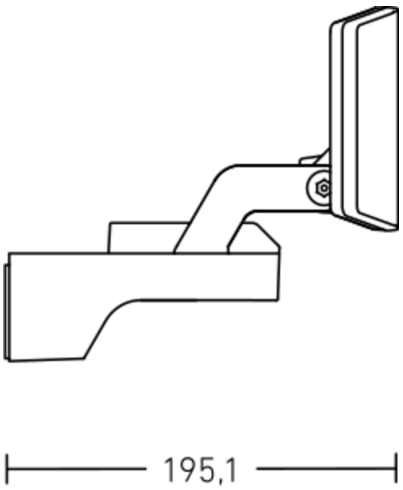
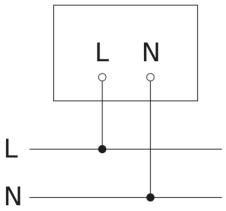
Circuit diagram