TIAL F10

Weidmüller Interface GmbH & Co. KG
Klingenbergstraße 26
D-32758 Detmold
Germany

www.weidmueller.com

Product image

Similar to illustration

Faster signal wiring with less space
To reduce wiring times, pre-assembled cables are used between the control system and the interface level and are simply connected to the TERMSERIES adapter. This enables throughput times in electrical cabinet building to be significantly reduced. The adapter has a universal fit and offers a genuine space advantage in interaction with the TERMSERIES products with identical contours.

- Reduced wiring time due to plug-and-play concept with pre-assembled cables
- Can be applied to the input and output sides of the TERMSERIES
- Ready for plus and minus switching logic
- High space-saving due to universal fit to other TERMSERIES products

General ordering data

Version	TERMSERIES, Adapter, 10-pole plug according to DIN EN 60603-13, long locking lever, Number of signal paths: 8, Rated voltage DC : 24 V, Rated current (per signal path): 125 mA
Order No.	1463540000
Type	TIAL F10
GTIN (EAN)	4050118323559
Qty.	1 pc(s).

TIAL F10

Weidmüller Interface GmbH & Co. KG
Klingenbergstraße 26
D-32758 Detmold
Germany

www.weidmueller.com

Technical data

Dimensions and weights

Depth	62 mm	Depth (inches)	2.441 inch
Height	43 mm	Height (inches)	1.693 inch
Width	102 mm	Width (inches)	4.016 inch
Net weight	74.15 g		

Temperatures

Storage temperature	-40 °C...85 °C	Operating temperature	-40 °C...60 °C
Humidity	5...95% (indoor), T_u = 40°C, without condensation		

Supply

Voltage supply	24 V DC ± 20 %	Status display	Green LED

Signals

Rated voltage DC	24 V	DC Voltage, max.	30 V
Rated current (per signal path)	125 mA	Current (per signal path), max.	1 A
Total current of all signals, max.	1 A	Number of signal paths	8

General data

Colour	black	
UL94 flammability rating component	Component	Housing
	UL94 flammability rating	V-0

Insulation coordination

Rated voltage	32 V	Pollution severity	2
Surge voltage category	III	Impulse withstand voltage	1.5 kV
Protection degree	IP20 in installed state		

Further details of approvals / standards

Certificate No. (DNV)	TAA00001E5	Certificate no. (cULus)	E141197

Connection data (supply)

Wire connection method	PUSH IN	Number of terminals	4 (+,+,−,−)
Clamping range, rated connection, min.	0.13 mm²	Clamping range, rated connection, max.	1.5 mm²
Blade size (supply)	0.6 x 3.5 mm		

Connection data (signal)

Plug type	10-pole plug according to DIN EN 60603-13, long locking lever

TIAL F10

Weidmüller Interface GmbH & Co. KG
Klingenbergstraße 26
D-32758 Detmold
Germany

www.weidmueller.com

Technical data

Classifications

ETIM 6.0	EC002780	ETIM 7.0	EC002780
ETIM 8.0	EC002780	ETIM 9.0	EC002780
ECLASS 9.0	27-14-11-52	ECLASS 9.1	27-14-11-52
ECLASS 10.0	27-14-11-52	ECLASS 11.0	27-14-11-52
ECLASS 12.0	27-14-11-52	ECLASS 13.0	27-14-11-52

Approvals

Approvals	
ROHS	Conform
UL File Number Search	UL Website
Certificate no. (cULus)	E141197

Downloads

Approval/Certificate/Document of Conformity	EU Konformitätserklärung / EU Declaration of Conformity
Engineering Data	CAD data – STEP
User Documentation	Beipackzettel / Package Insert – de/en TEMRSERIES Adapter SPS Interface Kabel - Deutsch TERMSERIES Adapters PLC interface cables - English
Catalogues	Catalogues in PDF-format
Brochures	

TIAL F10

Weidmüller Interface GmbH & Co. KG
Klingenbergstraße 26
D-32758 Detmold
Germany

www.weidmueller.com

Drawings

Wiring diagram

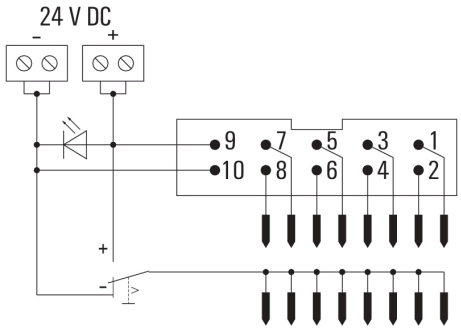

Example of use

Function of potential switch

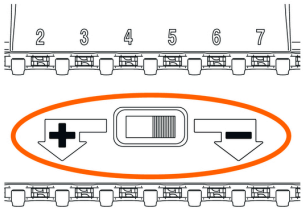

The potential switch, located between contact rows of TERMSERIES adapter, is used to switch the potential of the lower contact row to "+" or "–" potential of supply voltage.

Example of use

Installation note for adapter on input

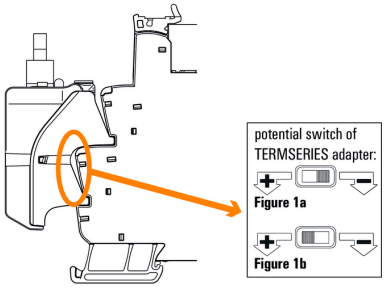

Figure 1a: Using adapter with positive-switching logic: switch potential switch at adapter to "–" position, installation recommended on **24 V DC** input (A1/A2).

Figure 1b: Using adapter with negative-switching logic: switch potential switch at adapter to "+" position, **must** be installed on **24 V UC** input (A1/A2).

Example of use

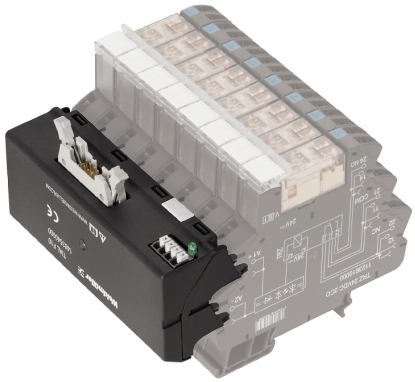

Dimensional drawing

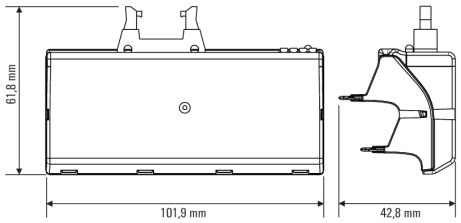

Dimensional drawing

Mounting adapter on input of TERMSERIES socket

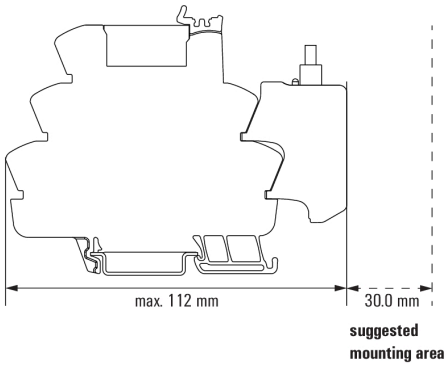

Mounting of the adapter on the input side of the TERMSERIES socket

TIAL F10

Weidmüller Interface GmbH & Co. KG
Klingenbergstraße 26
D-32758 Detmold
Germany

www.weidmueller.com

Drawings

Dimensional drawing

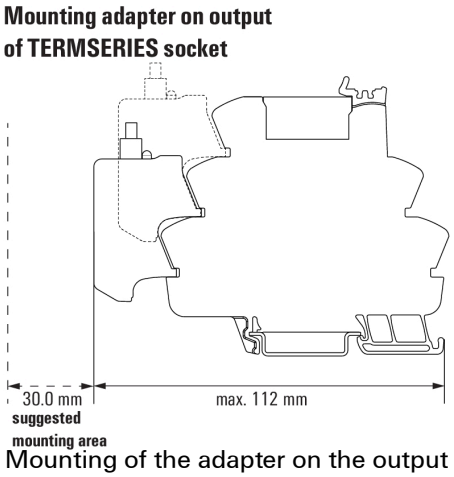

Mounting of the adapter on the output side of the TERMSERIES socket

Miscellaneous

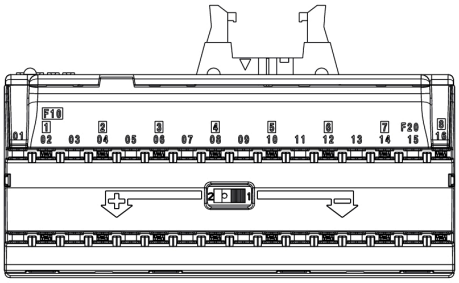

Front view

Miscellaneous

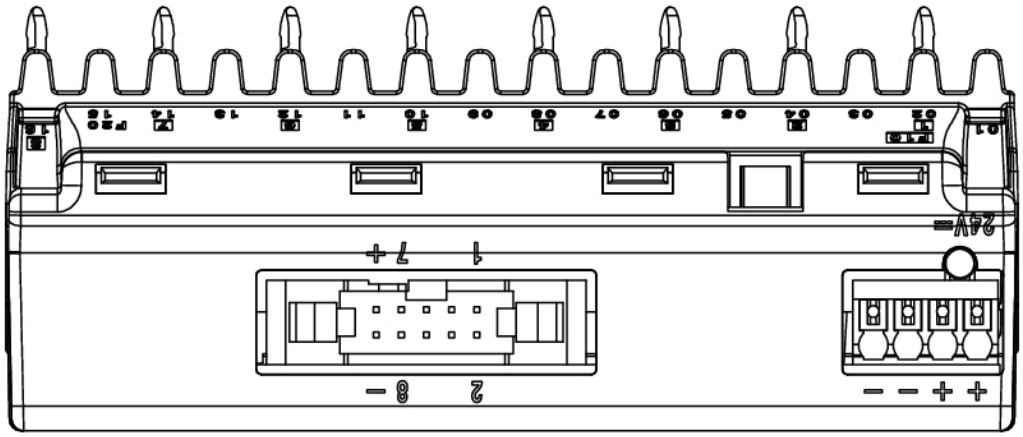

Top view

TIAL F10

Weidmüller Interface GmbH & Co. KG
Klingenbergstraße 26
D-32758 Detmold
Germany

www.weidmueller.com

Drawings

Miscellaneous

Type code TERMSERIES accessories

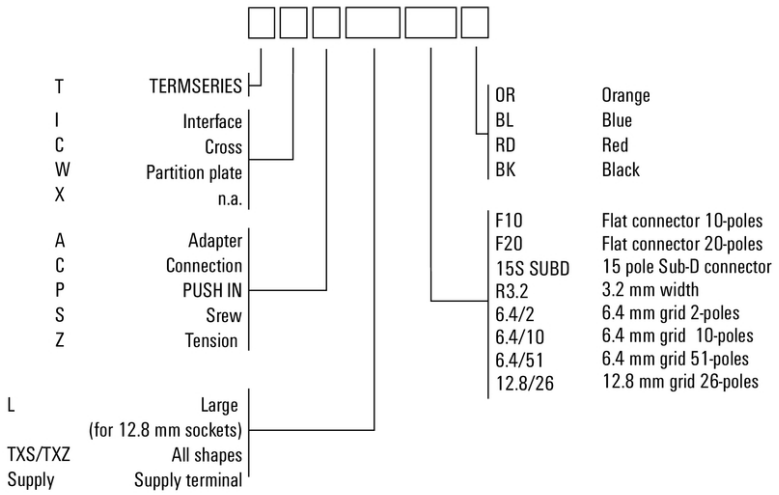

Type codes