TRP 24VDC 2CO

Weidmüller Interface GmbH & Co. KG
Klingenbergstraße 26
D-32758 Detmold
Germany

www.weidmueller.com

Product image

Similar to illustration

- 2 CO contacts
- Contact material: AgNi
- Unique multi-voltage input from 24 to 230 V UC
- Input voltages from 5 V DC to 230 V UC with coloured marking: AC: red, DC: blue, UC: white

General ordering data

Version	TERMSERIES, Relay module, Number of contacts: 2, CO contact AgNi, Rated control voltage: 24 V DC ±20 %, Continuous current: 8 A, PUSH IN, Test button available: No
Order No.	2618400000
Type	TRP 24VDC 2CO
GTIN (EAN)	4050118670431
Qty.	10 pc(s).

Creation date March 22, 2024 10:58:04 AM CET

TRP 24VDC 2CO

Weidmüller Interface GmbH & Co. KG
Klingenbergstraße 26
D-32758 Detmold
Germany

www.weidmueller.com

Technical data

Dimensions and weights

Depth	87.8 mm	Depth (inches)	3.457 inch
Height	89.4 mm	Height (inches)	3.52 inch
Width	12.8 mm	Width (inches)	0.504 inch
Net weight	55.83 g		

Temperatures

Storage temperature	-40 °C...85 °C	Operating temperature	-40 °C...60 °C
Humidity	5-95% relative humidity, T_u = 40°C, without condensation		

Rated data UL

Connection cross-section AWG, min.	AWG 26	Connection cross-section AWG, max.	AWG 14
Type of conductor	rigid copper conductor, flexible copper conductor	Pollution severity level	2

Control side

Rated control voltage	24 V DC ±20 %	Rated current DC	20.5 mA
Power rating	495 mW	Status indicator	Green LED
Protective circuit	Free-wheeling diode, Reverse polarity protection	Coil voltage of the replacement relay deviating from the rated control voltage	No
Coil voltage of the replacement relay	24 V DC		

Load side

Rated switching voltage	250 V AC	Continuous current	8 A
Max. switching frequency at rated load	0.1 Hz	Max. switching voltage, AC	250 V
Max. switching voltage, DC	250 V	Inrush current	15 A / 4 s
AC switching capacity (resistive), max.	2000 VA	DC switching capacity (resistive), max.	192 W @ 24 V
Switch-on delay	≤ 6 ms	Switch-off delay	<18 ms
Contact type	2 CO contact (AgNi)	Mechanical service life	30 x 10^6 switching cycles
Min. switching power	1 mA @ 24 V, 10 mA @ 10 V, 100 mA @ 5 V		

General data

Operating altitude	≤ 2000 m, above sea level	
Rail	TS 35	
Test button available	No	
Mechanical switch position indicator	No	
Colour	black	
UL94 flammability rating component	Component	Housing
	UL94 flammability rating	V-0
	Component	Retaining clip
	UL94 flammability rating	V-0
	Component	Pusher
	UL94 flammability rating	V-0

TRP 24VDC 2CO

Weidmüller Interface GmbH & Co. KG
Klingenbergstraße 26
D-32758 Detmold
Germany

www.weidmueller.com

Technical data

Insulation coordination

Rated voltage	300 V	Pollution severity	2
Surge voltage category	III	Clearance and creepage distances for control side - load side	≥ 6 mm
Dielectric strength for control side - load side	3.51 kV_{eff} /1 min.	Type of isolation at input and output	reinforced insulation
Dielectric strength of neighbouring contacts	2.5 kV_{eff} / 1 Min.	Type of isolation at neighbouring contacts	Basic insulation
Dielectric strength of open contact	1 kV_{eff} / 1 min	Dielectric strength to mounting rail	4 kV_{eff} / 1 Min.
Impulse withstand voltage	6 kV (1.2/50 µs)	Protection degree	IP20

Further details of approvals / standards

Certificate No. (DNV)	TAA00001E5	Certificate no. (cULus)	E141197

Connection data

Wire connection method	PUSH IN	Stripping length, rated connection	9 mm
Clamping range, rated connection	1.5 mm²	Clamping range, min.	0.14 mm²
Clamping range, max.	2.5 mm²	Wire connection cross section AWG, min.	AWG 26
Wire connection cross section AWG, max.	AWG 14	Wire cross-section, solid, min.	0.14 mm²
Wire cross-section, solid, max.	1.5 mm²	Wire cross-section, solid, min. (AWG)	AWG 26
Wire cross-section, solid, max. (AWG)	AWG 16	Wire connection cross section, finely stranded, min.	0.14 mm²
Wire connection cross section, finely stranded, max.	2.5 mm²	Wire cross-section, finely stranded, min. (AWG)	AWG 26
Wire cross-section, finely stranded, max. (AWG)	AWG 14	Wire connection cross-section, finely stranded with wire-end ferrules DIN 46228/4, min.	0.14 mm²
Wire connection cross-section, finely stranded with wire-end ferrules DIN 46228/4, max.	1.5 mm²	Conductor cross-section, flexible, AEH (DIN 46228-1), min.	0.14 mm²
Conductor cross-section, flexible, AEH (DIN 46228-1), max.	1.5 mm²	Twin wire-end ferrules, min.	0.5 mm²
Twin wire-end ferrules, max.	1 mm²	Blade size	0.4 x 2.0 mm

Classifications

ETIM 6.0	EC001437	ETIM 7.0	EC001437
ETIM 8.0	EC001437	ETIM 9.0	EC001437
ECLASS 9.0	27-37-16-01	ECLASS 9.1	27-37-16-01
ECLASS 10.0	27-37-16-01	ECLASS 11.0	27-37-16-01
ECLASS 12.0	27-37-16-01	ECLASS 13.0	27-37-16-01

Environmental Product Compliance

REACH SVHC	Lead 7439-92-1
SCIP	9e2cbc49-76d9-4611-b8ec-5b4f549a0aa9

TRP 24VDC 2CO

Weidmüller Interface GmbH & Co. KG
Klingenbergstraße 26
D-32758 Detmold
Germany

www.weidmueller.com

Technical data

Approvals

Approvals	
ROHS	Conform
UL File Number Search	UL Website
Certificate no. (cULus)	E141197

Downloads

Approval/Certificate/Document of Conformity	EU Konformitätserklärung / EU Declaration of Conformity
Engineering Data	CAD data – STEP
User Documentation	Beipackzettel / Package Insert – multilingual
Catalogues	Catalogues in PDF-format

TRP 24VDC 2CO

Weidmüller Interface GmbH & Co. KG
Klingenbergstraße 26
D-32758 Detmold
Germany

www.weidmueller.com

Drawings

Wiring diagram

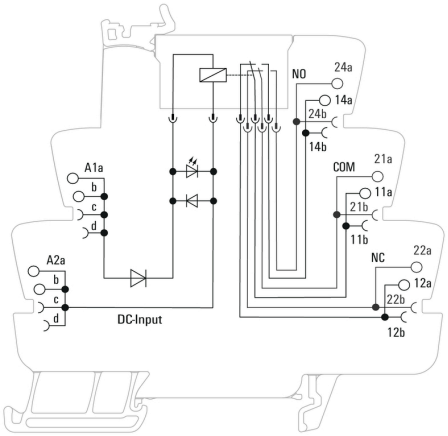

Graph

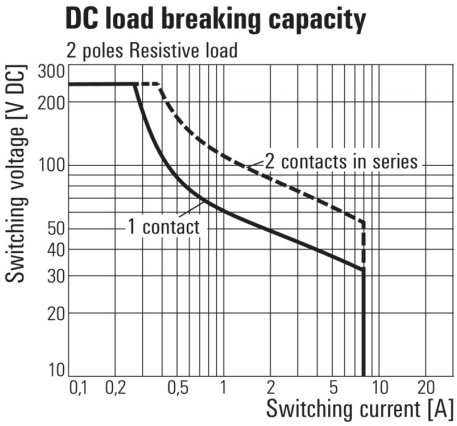

DC load limit curve
Resistive load

Graph

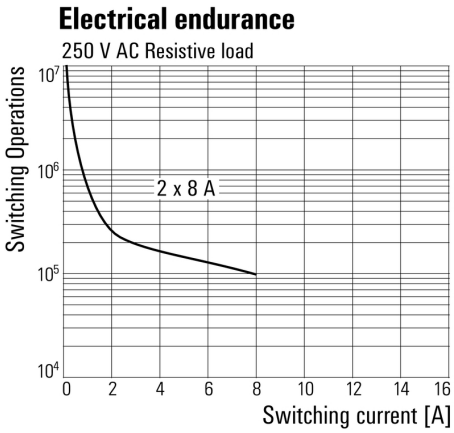

Electrical service life230 V AC resistive load
230 V AC resistive load

Dimensional drawing

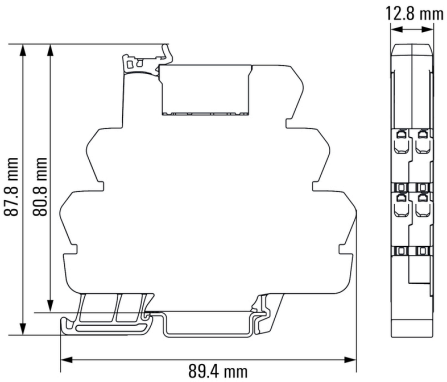

TRP 24VDC 2CO

Weidmüller Interface GmbH & Co. KG
Klingenbergstraße 26
D-32758 Detmold
Germany

www.weidmueller.com

Drawings

Miscellaneous

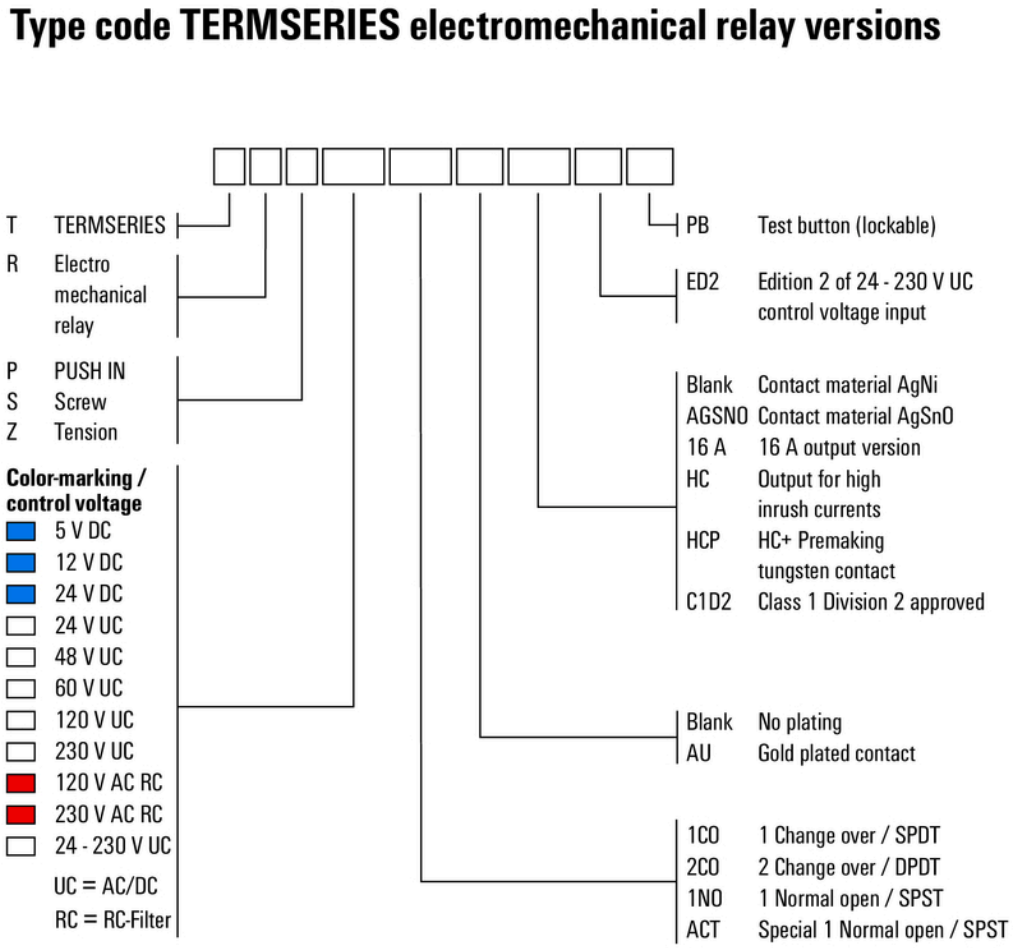

Type codes