Multifunctional energy meter

CEM-D210, CEM-D211, CEM-D212, CEM-D210-MID, CEM-D211-MID, CEM-D212-MID, CEM-D310, CEM-D311, CEM-D312, CEM-D310-MID, CEM-D311-MID, CEM-D312-MID

INSTRUCTION MANUAL

(M439B01-03-24A)

FORHOLDSREGLER FOR SIKKERHET

Følg advarslene beskrevet i denne manualen, som er merket med symbolene nedenfor.

FARE
Indikerer at det må rettes spesiell oppmerksomhet mot et bestemt punkt.

MERK
Angir at spesiell oppmerksomhet må rettes mot et bestemt punkt.

Hvis enheten må håndteres i forbindelse med installasjon, igangkjøring eller vedlikehold, skal følgende tas i betraktning:

Feil håndtering eller installasjon av enheten kan føre til personskade samt skade på enheten. Spesielt kan håndtering når spenning er påført, medføre elektrisk støt som kan føre til dødsfall eller alvorlig personskade. Mangelfull installasjon eller vedlikehold kan også medføre brannfare. Les manualen nøye før enheten kobles til. Følg alle installasjons- og vedlikeholdsinstruksjoner gjennom hele enhetens levetid. Vær spesielt oppmerksom på installasjonskravene i National Electrical Code (NEC).

Se bruksanvisningen før enheten tas i bruk.
I denne manualen kan manglende overholdelse eller feil utførelse av instruksjoner som er merket med dette symbolet, føre til personskade eller skade på enheten og/eller installasjoner.

CIRCUTOR S.A.U. forbeholder seg retten til å endre produktets egenskaper eller produktmanualen uten forutgående varsel.

ANSVARSFRASKRIVELSE

CIRCUTOR S.A.U. forbeholder seg retten til å foreta endringer på enheten eller i enhetens spesifikasjoner som er angitt i denne bruksanvisningen, uten forutgående varsel. **CIRCUTOR S.A.U.** gjør via sitt nettsted de nyeste versjonene av enhetens spesifikasjoner og de mest oppdaterte manualene tilgjengelige for sine kunder.

22
PAP

www.function.no

CIRCUTOR S.A.U. anbefaler å bruke originale kabler og tilbehør som leveres med enheten.

SAFETY PRECAUTIONS

Follow the warnings described in this manual with the symbols shown below.

DANGER
Warns of a risk, which could result in personal injury or material damage.

ATTENTION
Indicates that special attention should be paid to a specific point.

If you must handle the unit for its installation, start-up or maintenance, the following should be taken into consideration:

Incorrect handling or installation of the device may result in injury to personnel as well as damage to the device. In particular, handling with voltages applied may result in electric shock, which may cause death or serious injury to personnel. Defective installation or maintenance may also lead to the risk of fire.

Read the manual carefully prior to connecting the device. Follow all installation and maintenance instructions throughout the device's working life. Pay special attention to the installation standards of the National Electrical Code.

Refer to the instruction manual before using the device

In this manual, if the instructions marked with this symbol are not respected or carried out correctly, it can result in injury or damage to the device and / or installations.

CIRCUTOR S.A.U. reserves the right to modify features or the product manual without prior notification.

DISCLAIMER

CIRCUTOR S.A.U. reserves the right to make modifications to the device or the unit specifications set out in this instruction manual without prior notice.

CIRCUTOR S.A.U. on its web site, supplies its customers with the latest versions of the device specifications and the most updated manuals.

www.circutor.com

22
PAP

CIRCUTOR S.A.U. recommends using the original cables and accessories that are supplied with the device.

CONTENTS

SAFETY PRECAUTIONS 3
DISCLAIMER 3
CONTENTS 4
REVISION LOG 6
SYMBOLS 6
1.- VERIFICATION UPON RECEPTION 7
2.- PRODUCT DESCRIPTION 7
3.- INSTALLATION OF THE DEVICE 9
3.1. - PRELIMINARY RECOMMENDATIONS 9
3.2.- INSTALLATION 9
3.3.- DEVICE TERMINALS 10
3.3.1. - CEM-D210, CEM-D210-MID 10
3.3.2. - CEM-D211, CEM-D211-MID 10
3.3.3. - CEM-D212, CEM-D212-MID 11
3.3.4. - CEM-D310, CEM-D310-MID 11
3.3.5. - CEM-D311, CEM-D311-MID 12
3.3.6. - CEM-D312, CEM-D312-MID 12
3.4. - CONNECTION DIAGRAMS 13
3.4.1. - THREE-PHASE NETWORK MEASUREMENT WITH 4 WIRES, CEM-D21x, CEM-D21x-MID MODELS 13
3.4.2. - THREE-PHASE NETWORK MEASUREMENT WITH 4 WIRES, CEM-D31x, CEM-D31x-MID MODELS 13
3.4.3. - THREE-PHASE NETWORK MEASUREMENT WITH 3 WIRES, CEM-D21x, CEM-D21x-MID MODELS 14
3.4.4. - THREE-PHASE NETWORK MEASUREMENT WITH 3 WIRES, CEM-D31x, CEM-D31x-MID MODELS 14
3.5. - CONNECTION 15
4. - OPERATION 16
4.1.- DISPLAY 19
4.2. - KEYS 20
4.3.- LED INDICATORS 21
4.4. - PULSE OUTPUT 21
4.5.- DIGITAL INPUTS 22
4.6. - OPTICAL PORT 23
5.- DISPLAY 24
5.1.-**DEFAULT** MENU 25
5.2.-**INSTANT** MENU 26
5.3.-**ENERGY** MENU 28
5.3.1. - CEM-D210, CEM-D210-MID, CEM-D310 and CEM-D310-MID MODELS 28
5.3.2.- CEM-D211, CEM-D211-MID, CEM-D212, CEM-D212-MID, CEM-D311, CEM-D311-MID, CEM-D312 and CEM-D312-MID MODELS 30
5.4. - **M.DEM** MENU 35
5.5.-INFORMATION MENU 36
6.- CONFIGURATION MENU 37
6.1.- CURRENT PRIMARY 39
6.2.- CURRENT SEC 40
6.3.- MODE CODE 41
6.4.- TYPE INSTALL 41
6.5.- DEMAND 42
6.5.1. - METHOD 42
6.5.2. - INTEGRATION PERIOD 43
6.6.- COMM 44
6.6.1. - BAUD RATE 44
6.6.2.- ADDRESS OF PERIPHERAL 45
6.6.3. - DATA BITS, PARITY, STOP BITS 45
6.7.- TARIFF MODE 46
6.8.- SCROLL 47
6.9.- EFFICIE 48
6.9.1. - EFFICIENCY 48
6.9.2. - COST RATIO FOR ENERGY CONSUMED, TARIFFS T1 AND T2 49
6.9.3. - COST RATIO FOR ENERGY CONSUMED, TARIFFS T3 AND T4 49
6.9.4. - RATIO OF CARBON EMISSIONS $kgCO_2$ FOR THE ENERGY CONSUMED, TARIFFS T1 AND T2 50
6.9.5. - RATIO OF CARBON EMISSIONS $kgCO_2$ FOR THE ENERGY CONSUMED, TARIFFS T3 AND T4 51

6.10.- DATA TIME 52
6.10.1. - DATE 52
6.10.2. - TIME 53
6.11.- DIGITAL INPUT 2 53
6.11.1. - MODE 54
6.11.2. - PULSE WIDTH 54
6.12.- AUTO UTC h 55
6.13.- OUTPUT 55
6.14.- PASSWORD 56
6.15.- LIGHT LCD 57
7.- RS-485 COMMUNICATIONS 58
7.1.- CONNECTIONS 58
7.2.- MODBUS PROTOCOL 58
7.2.1.- READ COMMAND 59
7.2.2. - WRITE COMMAND 59
7.3. - MODBUS VARIABLES 60
7.3.1.- INSTANTANEOUS PARAMETERS 60
7.3.2. - ENERGY PARAMETERS 61
7.3.3. - OTHER PARAMETERS 65
7.3.4. - CONFIGURATION PARAMETERS 66
7.3.5. - TARIFFS 68
8.- M-BUS COMMUNICATIONS 70
8.1. - CONNECTIONS 70
8.2. - M-BUS PROTOCOL 70
9.- TECHNICAL SPECIFICATIONS 77
10.- MAINTENANCE AND TECHNICAL SERVICE 81
11.- GUARANTY 81
12.- EU DECLARATION OF CONFORMITY 82

REVISION LOG

Table 1: Revision log.

Date	Revision	Description
09/25	M439B01-03-24A	First Version

SYMBOLS

Table 2: Symbols.

Symbol	Description
CE	In accordance with the relevant European directive.
	Device covered by European Directive 2012/19/EC. At the end of its useful life, do not discard of the device in a household refuse bin. Follow local regulations on electronic equipment recycling.
⎓	Direct current.
~	Alternating current.
⧈	Double insulation.

Note: *The images of the devices are for illustration purposes only and may differ from the original device.*

1.- VERIFICATION UPON RECEPTION

Upon receiving the device, check the following points:

a) The device meets the specifications described in your order.
b) The device has not suffered any damage during transport.
c) Perform an external visual inspection of the device prior to switching it on.
d) Check that it has been delivered with the following:
- An installation guide.

If any problem is noticed upon reception, immediately contact the transport company and/or **CIRCUTOR**'s after-sales service.

2.- PRODUCT DESCRIPTION

The **CEM-D21x/CEM-D31x** is a three-phase energy meter for measuring active and reactive energy. The device has different models:

✓ **CEM-D21x** direct-mode meters for measuring active energy as per class 1 (IEC 62053-21) and reactive class 2 (IEC 62053-23).
✓ **CEM-D21x-MID** direct-mode meters for measuring active energy as per class B (UNE-EN-50470) and reactive class 2 (IEC 62053-23).
✓ **CEM-D31x** indirect-mode meters for measuring active energy as per class 1 (IEC 62053-21) and reactive class 2 (IEC 62053-23).
✓ **CEM-D31x-MID** indirect-mode meters for measuring active energy as per class B (UNE-EN-50470) and reactive class 2 (IEC 62053-23).

The device features:

- **2 keys** used to navigate the various screens and program the device.
- **2** verification LEDs.
- **LCD display** to show all the parameters.
- **2 connection seals.**
- **2 terminal box covers** for the top part of the terminal box and the fixing screws.
- **Optical communication port**.
- **RS-485** communications, depending on the model (see **Table 3**).
- **M-BUS** communications, depending on the model (see **Table 3**).
- **1 Pulse output**, depending on the model (see **Table 3**).
- **2 Digital inputs**, depending on the model (see **Table 3**).
- **RTC**, real-time clock, depending on the model (see **Table 3**).

- **Multi-tariff**, depending on the model (see **Table 3**).

Table 3: List of models.

Model	Current Measurement	RS-485	M-BUS	Pulse Output	Digital inputs	RTC	Multi-tariff
CEM-D210 CEM-D210-MID	Direct Mode	✗	✗	✓	✗	✗	✗
CEM-D211 CEM-D211-MID	Direct Mode	✓	✗	✗	✓	✓	✓
CEM-D212 CEM-D212-MID	Direct Mode	✗	✓	✗	✓	✓	✓
CEM-D310 CEM-D310-MID	Indirect Mode	✗	✗	✓	✗	✗	✗
CEM-D311 CEM-D311-MID	Indirect Mode	✓	✗	✗	✓	✓	✓
CEM-D312 CEM-D312-MID	Indirect Mode	✗	✓	✗	✓	✓	✓

3.- INSTALLATION OF THE DEVICE

3.1. - PRELIMINARY RECOMMENDATIONS

In order to use the device safely, it is critical that individuals who handle it follow the safety measures set out in the standards of the country where it is being used, employ the personal protective equipment necessary, and pay attention to the various warnings provided in this instruction manual.

The **CEM-D21x/CEM-D31x** device must be installed by authorised and qualified staff.

The power supply plug must be disconnected and measurement systems switched off before handling, altering the connections or replacing the device. It is dangerous to handle the device while it is powered.

It is essential to keep wires in perfect condition to prevent accidents, injuries or damage to installations.

The manufacturer of the device is not responsible for any damage resulting from failure by the user or installer to heed the warnings and/or recommendations set out in this manual, nor for damage resulting from the use of non-original products or accessories or those made by other manufacturers.

Do not use the device to take any measurements if an anomaly or malfunction is detected.

Check the surrounding environment before starting to take measurements. Do not take any measurements in hazardous or explosive environments.

Before carrying out maintenance, repair or handling of any of the device's connections, the device must be disconnected from all power sources, both from the device's own power supply and the measurement's.
Contact the after-sales service if you detect that the device is not working properly.

3.2.- INSTALLATION

The device must be installed inside a medium- or low-voltage electric panel or enclosure, with DIN rail mounting (IEC 60715). All electrical connections must be covered by the plastic covers, and only the display and keypad should remain exposed.

The degree of protection of the device is Class II.

When the device is on, its terminals, opening covers or removing elements may expose the user to parts that are hazardous to touch. Do not use the device until it is fully installed.

The device must be connected to a power circuit that is protected with gL(IEC 60269) or M class fuses with a rating of 0.5 to 2 A. It must be fitted with a circuit breaker or equivalent device, in order to be able to disconnect the device from the power supply network.

3.3.- DEVICE TERMINALS

3.3.1. - CEM-D210, CEM-D210-MID

Table 4: List of terminals on the CEM-D210, CEM-D210-MID.

Device terminals	
1: L1, Current output (voltage) L1	**7: L3**, Current input (voltage) L3
2: L2, Current output (voltage) L2	**8: N**, neutral input
3: L3, Current output (voltage) L3	**15: SO+,** Pulse output (+)
4: N, Neutral output	**16: SO-,** Pulse output (-)
5: L1, Current input (voltage) L1	**17: NC,** Not connected
6: L2, Current input (voltage) L2	

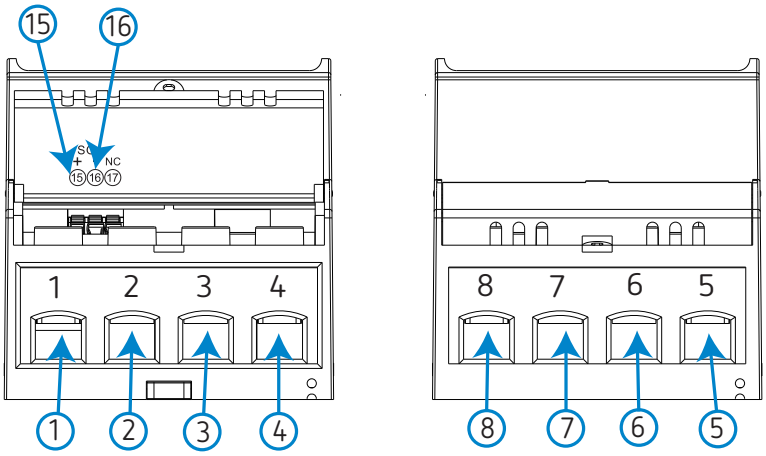

Figure 1: Terminals on the CEM-D210, CEM-D210-MID.

3.3.2. - CEM-D211, CEM-D211-MID

Table 5: List of terminals on the CEM-D211, CEM-D211-MID.

Device terminals	
1: L1, Current output (voltage) L1	**8: N**, neutral input
2: L2, Current output (voltage) L2	**15: C,** Digital input (Common)
3: L3, Current output (voltage) L3	**16: I1,** Digital input 1
4: N, Neutral output	**17: I2,** Digital input 2
5: L1, Current input (voltage) L1	**18: A+,** RS-485 communications
6: L2, Current input (voltage) L2	**19: B-,** RS-485 communications
7: L3, Current input (voltage) L3	**20: NC,** Not connected

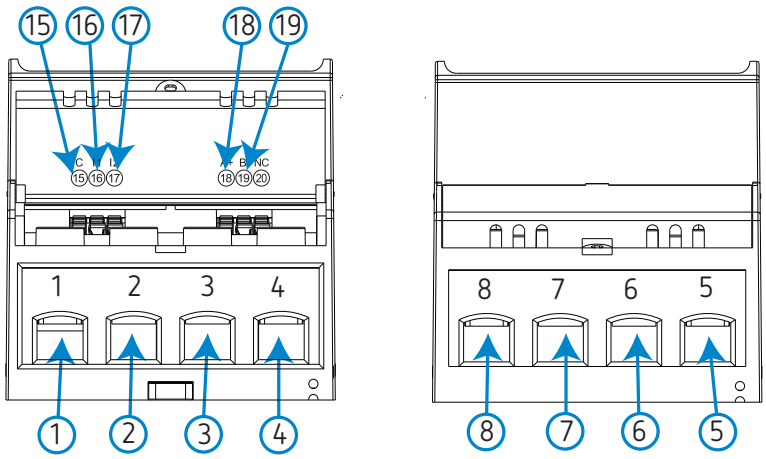

Figure 2: Terminals on the CEM-D211, CEM-D211-MID.

3.3.3. - CEM-D212, CEM-D212-MID

Table 6: List of terminals on the CEM-D212, CEM-D212-MID.

Device terminals	
1: L1, Current output (voltage) L1	**8: N**, neutral input
2: L2, Current output (voltage) L2	**15: C,** Digital input (Common)
3: L3, Current output (voltage) L3	**16: I1,** Digital input 1
4: N, Neutral output	**17: I2,** Digital input 2
5: L1, Current input (voltage) L1	**18: A+,** M-BUS communications
6: L2, Current input (voltage) L2	**19: B-,** M-BUS communications
7: L3, Current input (voltage) L3	**20: NC,** Not connected

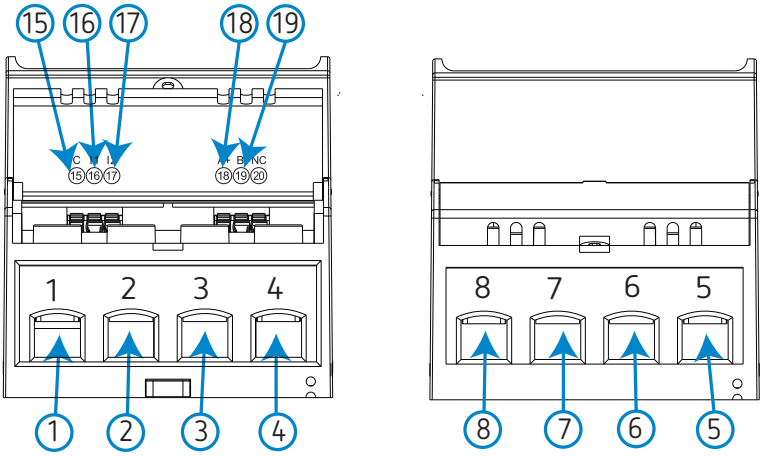

Figure 3: Terminals on the CEM-D212, CEM-D212-MID.

3.3.4. - CEM-D310, CEM-D310-MID

Table 7: List of terminals on the CEM-D310, CEM-D310-MID.

Device terminals	
1: S1, Current input L1	**11:** Voltage input L2
3: S2, Current output L1	**12:** Voltage input L3
4: S1, Current input L2	**13: N**, neutral input
6: S2, Current output L2	**15: SO+,** Pulse output (+)
7: S1, Current input L3	**16: SO-,** Pulse output (-)
9: S2, Current output L3	**17: NC,** Not connected
10: Voltage input L1	

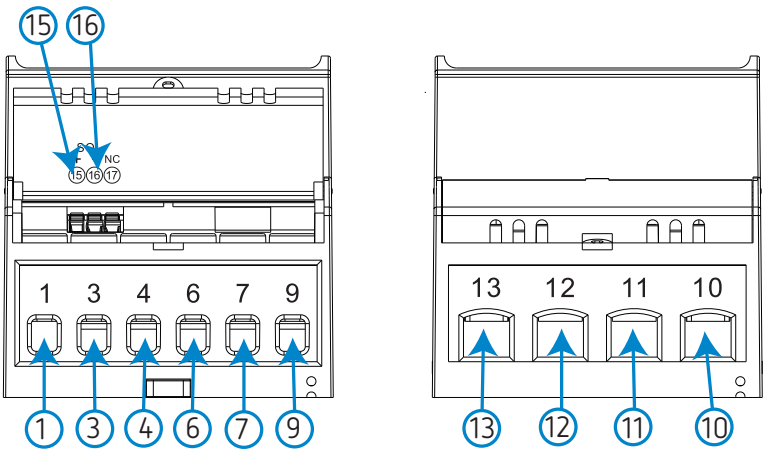

Figure 4: Terminals on the CEM-D310, CEM-D310-MID.

3.3.5. - CEM-D311, CEM-D311-MID

Table 8: List of terminals on the CEM-D311, CEM-D311-MID.

Device terminals	
1: S1, Current input L1	**12:** Voltage input L3
3: S2, Current output L1	**13: N**, neutral input
4: S1, Current input L2	**15: C,** Digital input (Common)
6: S2, Current output L2	**16: I1,** Digital input 1
7: S1, Current input L3	**17: I2,** Digital input 2
9: S2, Current output L3	**18: A+,** RS-485 communications
10: Voltage input L1	**19: B-,** RS-485 communications
11: Voltage input L2	**20: NC,** Not connected

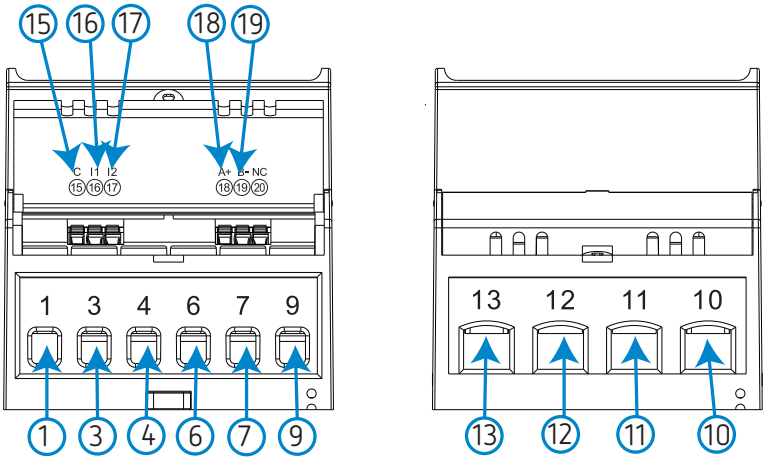

Figure 5: Terminals on the CEM-D311, CEM-D311-MID.

3.3.6. - CEM-D312, CEM-D312-MID

Table 9: List of terminals on the CEM-D312, CEM-D312-MID.

Device terminals	
1: S1, Current input L1	**12:** Voltage input L3
3: S2, Current output L1	**13: N**, neutral input
4: S1, Current input L2	**15: C,** Digital input (Common)
6: S2, Current output L2	**16: I1,** Digital input 1
7: S1, Current input L3	**17: I2,** Digital input 2
9: S2, Current output L3	**18: A+,** M-BUS communications
10: Voltage input L1	**19: B-,** M-BUS communications
11: Voltage input L2	**20: NC,** Not connected

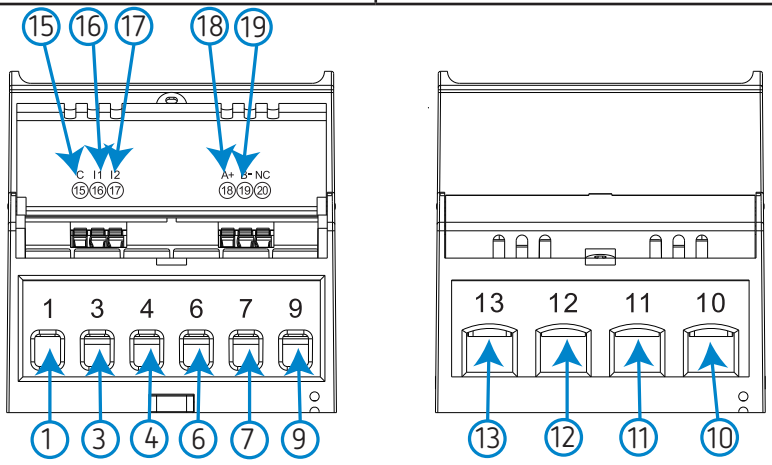

Figure 6: Terminals on the CEM-D312, CEM-D312-MID.

3.4. - CONNECTION DIAGRAMS

3.4.1. - THREE-PHASE NETWORK MEASUREMENT WITH 4 WIRES, CEM-D21x, CEM-D21x-MID MODELS

Type install: 4-3Ph

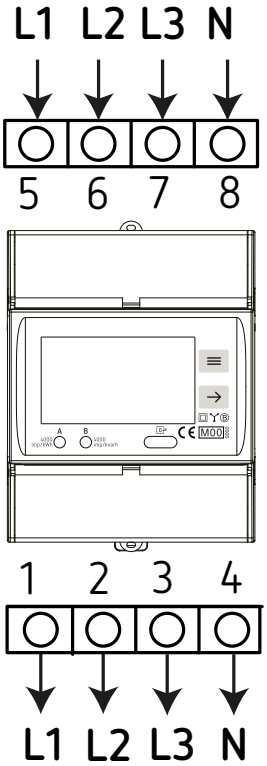

Figure 7: Three-phase network measurement with 4 wires, CEM-D21x, CEM-D21x-MID models.

3.4.2. - THREE-PHASE NETWORK MEASUREMENT WITH 4 WIRES, CEM-D31x, CEM-D31x-MID MODELS

Type Install: 4-3Ph

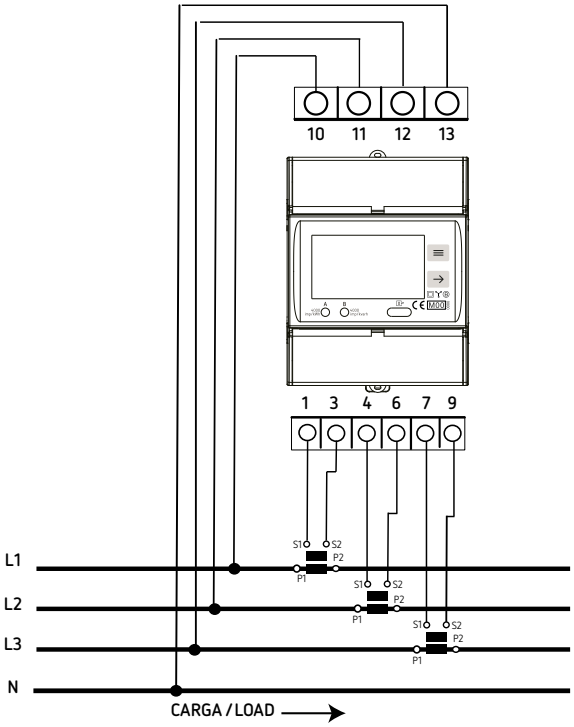

Figure 8: Three-phase network measurement with 4 wires, CEM-D31x, CEM-D31x-MID models.

3.4.3. - THREE-PHASE NETWORK MEASUREMENT WITH 3 WIRES, CEM-D21x, CEM-D21x-MID MODELS

Type Install: 3-3Ph

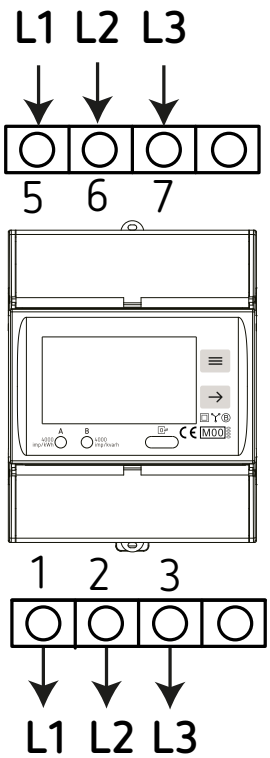

Figure 9: Three-phase network measurement with wires, CEM-D21x, CEM-D21x-MID models.

3.4.4. - THREE-PHASE NETWORK MEASUREMENT WITH 3 WIRES, CEM-D31x, CEM-D31x-MID MODELS

Type Install: 3-3Ph

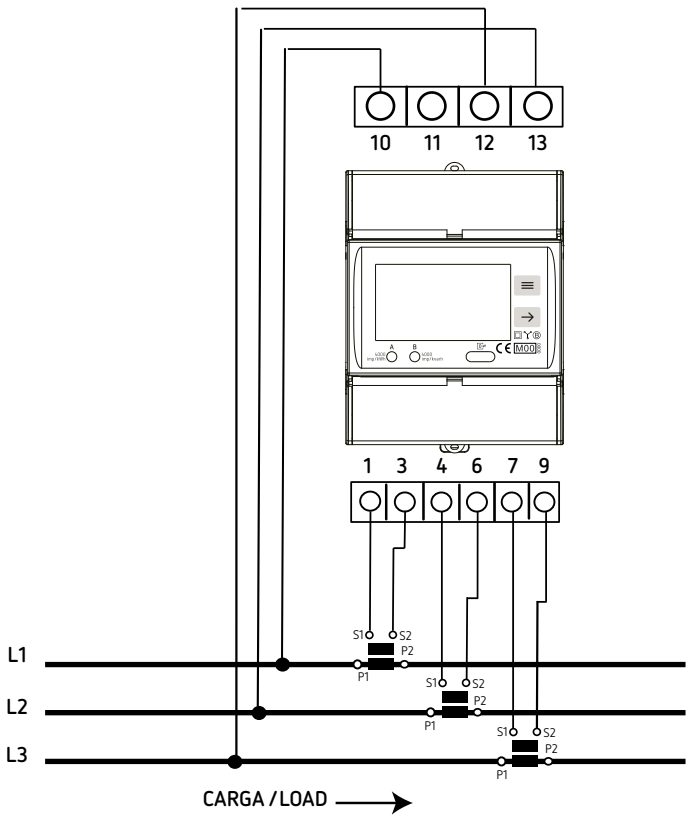

Figure 10: Three-phase network measurement with 3 wires, CEM-D31x, CEM-D31x-MID models.

3.5. - CONNECTION

The **CEM-D21x/CEM-D31x** has terminal covers that cover the top of the terminal box and the fixing screws (**Figure 11**).

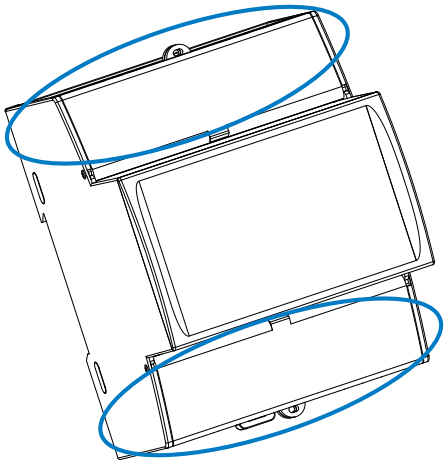

Figure 11: CEM-D21x/CEM-D31x terminal covers.

Once the device is connected, the option exists to protect it using two connection seals (**Figure 12**).

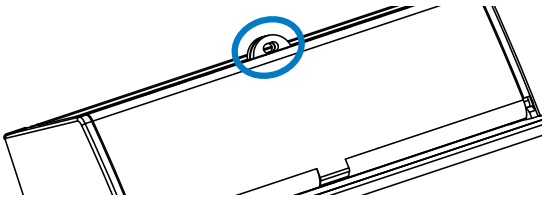

Figure 12: Seal of the CEM-D21x/CEM-D31x.

4. - OPERATION

The **CEM-D21x/CEM-D31x** can measure in 2 quadrants (consumption) or 4 quadrants (consumption and generation) using the **IEC 61557-12** measurement convention. The measurement method can be selected in section ***"6.3.-MODE CODE"***.

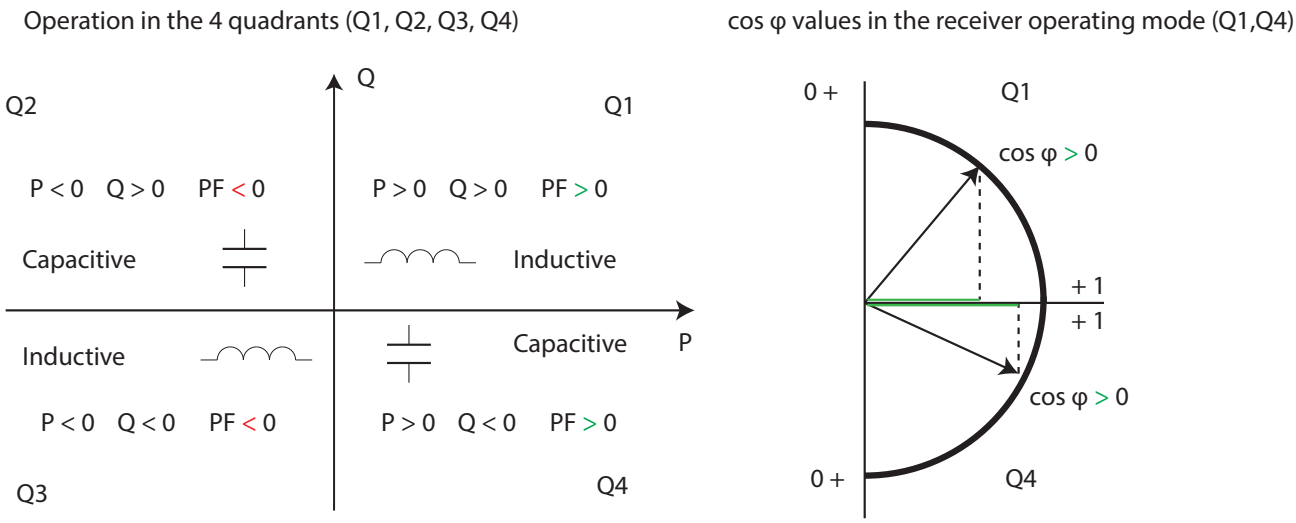

Figure 13:IEC 61557-12 measurement convention.

Table 10: CEM-D21x/CEM-D31x measurement parameters.

Parameter	Display	RS-485	
		Instantaneous	Maximum
Voltage Phase-Neutral L1, L2, L3	✓	✓	-
Voltage Phase-to-Phase	✓	✓	-
Average phase-neutral voltage	-	✓	-
Average phase-phase voltage	-	✓	-
Current L1, L2, L3	✓	✓	-
Vector sum of the three-phase current	-	✓	-
Active Power	✓	✓	-
Active Power L1, L2, L3	-	✓	-
Apparent Power	✓	✓	-
Apparent Power L1, L2, L3	-	✓	-
Reactive Power	✓	✓	-
Reactive Power L1, L2, L3	-	✓	-
Frequency	✓	-	-
Frequency L2, L2, L3	-	✓	-
Power factor L1, L2, L3, III	✓	✓	-
Maximum Demand Imported Active Power III	✓	-	-
Maximum Demand Exported Active Power III	✓	-	-
Maximum Demand Imported Reactive Power III	✓	-	-
Maximum Demand Exported Reactive Power III	✓	-	-
Maximum Demand Imported Apparent Power III	✓	-	-
Maximum Demand Exported Apparent Power III	✓	-	-

Table 10 (Continued): CEM-D21x/CEM-D31x measurement parameters.

Parameter	Display	RS-485	
		Instantaneous	Maximum
Maximum Demand Direct Active Power L1, L2, L3	-	✓	✓
Maximum Demand Combined Direct Active Power	-	✓	✓
Maximum Demand Reverse Active Power L1, L2, L3	-	✓	✓
Maximum Demand Combined Reverse Active Power	-	✓	✓
Maximum Demand Combined Active Power	-	✓	✓
Maximum Demand Direct Reactive Power L1, L2, L3	-	✓	✓
Maximum Demand Combined Direct Reactive Power	-	✓	✓
Maximum Demand Reverse Reactive Power L1, L2, L3	-	✓	✓
Maximum Demand Combined Reverse Reactive Power	-	✓	✓
Maximum Demand Direct Apparent Power L1, L2, L3	-	✓	✓
Maximum Demand Combined Direct Apparent Power	-	✓	✓
Maximum Demand Reverse Apparent Power L1, L2, L3	-	✓	✓
Maximum Demand Combined Reverse Apparent Power	-	✓	✓
Maximum Demand Total Apparent Power L1, L2, L3	-	✓	✓
Maximum Demand Total Combined Apparent Power	-	✓	✓
Total active energy imported	✓	✓	-
Total active energy exported	✓	✓	-
Partial imported active energy	✓	✓	-
Partial exported active energy	✓	✓	-
Imported active energy Tariff 1, 2, 3, 4	✓	✓	-
Exported active energy Tariff 1, 2, 3, 4	✓	✓	-
Partial imported active energy Tariff 1, 2, 3, 4	✓	✓	-
Partial exported active energy Tariff 1, 2, 3, 4	✓	✓	-
Direct Active Energy L1, L2, L3	-	✓	-
Reverse Active Energy L1, L2, L3	-	✓	-
Direct Reactive Energy L1, L2, L3	-	✓	-
Reverse Reactive Energy L1, L2, L3	-	✓	-
Total reactive energy quadrant 1	✓	✓	-
Total reactive energy quadrant 2	✓	✓	-
Total reactive energy quadrant 3	✓	✓	-
Total reactive energy quadrant 4	✓	✓	-
Total Reactive Energy L1, L2, L3 quadrant 1	-	✓	-
Total Reactive Energy L1, L2, L3 quadrant 2	-	✓	-
Total Reactive Energy L1, L2, L3 quadrant 3	-	✓	-
Total Reactive Energy L1, L2, L3 quadrant 4	-	✓	-
Total reactive energy imported	-	✓	-
Total reactive energy exported	-	✓	-
Partial reactive energy quadrant 1	✓	✓	-
Partial reactive energy quadrant 2	✓	✓	-
Partial reactive energy quadrant 3	✓	✓	-
Partial reactive energy quadrant 4	✓	✓	-
Reactive energy quadrant 1 Tariff 1, 2, 3, 4	✓	✓	-

Table 10 (Continued): CEM-D21x/CEM-D31x measurement parameters.

Parameter	Display	RS-485	
		Instantaneous	Maximum
Reactive energy quadrant 2 Tariff 1, 2, 3, 4	✓	✓	-
Reactive energy quadrant 3 Tariff 1, 2, 3, 4	✓	✓	-
Reactive energy quadrant 4 Tariff 1, 2, 3, 4	✓	✓	-
Partial reactive energy quadrant 1 Tariff 1, 2, 3, 4	✓	✓	-
Partial reactive energy quadrant 2 Tariff 1, 2, 3, 4	✓	✓	-
Partial reactive energy quadrant 3 Tariff 1, 2, 3, 4	✓	✓	-
Partial reactive energy quadrant 4 Tariff 1, 2, 3, 4	✓	✓	-
Operating hours	✓	✓	-
Partial operating hours	-	✓	-
Operating hours Tariff 1, 2, 3, 4	✓		
Operating hours of partial Active Energy Tariff 1, 2, 3, 4 (RTC)	-	✓	-
Cost of Energy consumed	✓		
Cost of Energy consumed, Tariff 1, 2, 3, 4	✓		
Cost of Partial imported active energy	-	✓	-
Cost of partial active energy Tariff 1, 2, 3, 4 (RTC)	-	✓	-
Cost of total partial active energy	-	✓	-
Carbon emissions of Energy consumed	✓		
Carbon emissions of Energy consumed Tariff 1, 2, 3, 4	✓		
Carbon Emissions of Partial imported active energy	-	✓	-
Carbon Emissions of Partial Active Energy Tariff 1, 2, 3, 4 (RTC)	-	✓	-
Carbon Emissions of Total Partial active energy	-	✓	-

Note: *Depending on the model, some parameters are not available.*

✓ Maximum demand

The maximum demand is the average instantaneous power over a specific time interval, usually 15 minutes. There are several ways to calculate this parameter:

Fixed Window (by block)

This is the calculation of maximum demand in a specific interval (usually every 15 minutes). Once the number is calculated, the value is saved and a new calculation for the next 15 minutes begins. The result would be 4 values per hour.

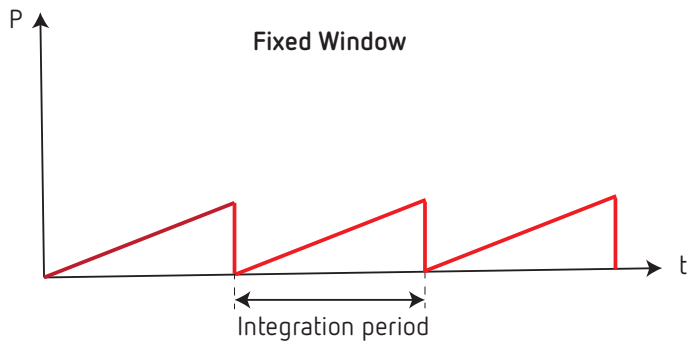

Figure 14:Fixed Window.

Sliding window

This is the calculation of maximum demand in a specific interval (usually every 15 minutes). Once the number is calculated, it is refreshed every minute with the values from the last 15 minutes. In other words, every minute (this time can be variable) we will have a maximum demand number for the last 15 minutes. The result would be 60 values per hour.

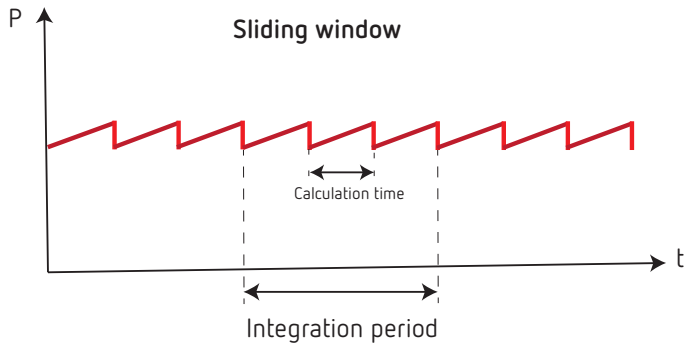

Figure 15:Sliding Window.

The calculation method and the integration period of the **CEM-D21x/CEM-D31x** are programmed in section ***"6.5 - DEMAND"***.

4.1.- DISPLAY

The device has an LCD display that shows all the device's parameters, **Figure 16,** divided into 2 areas:

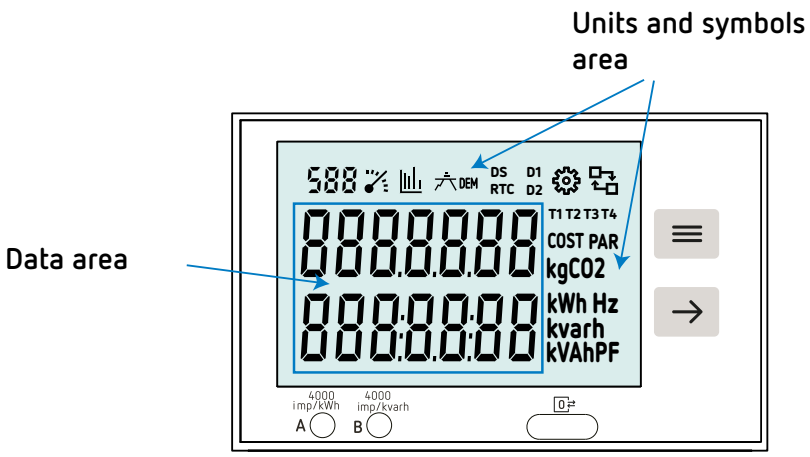

Figure 16: Areas of the CEM-D21x/CEM-D31x display.

✓The **Data area**, which displays all the values measured by the device.

✓The **Units and symbols area,** which displays the different statuses, units and device information.

Table 11: Display symbols

Icon	Description	Icon	Description
588	Indicator of the display being shown.		Active RS-485/M-BUS communications
	Instantaneous values.	**DS, RTC**	Tariff Mode.
	Energies	**D1, D2**	Digital output connected
DEM	Maximum demand.	**T1, T2, T3, T4**	Active tariff
	Settings screen	**PAR**	Partial energies
RTC	Device with real-time clock		

4.2. - KEYS

The **CEM-D21x/CEM-D31x** has 2 keys to browse through the different screens and set up the device, **Figure 17**.

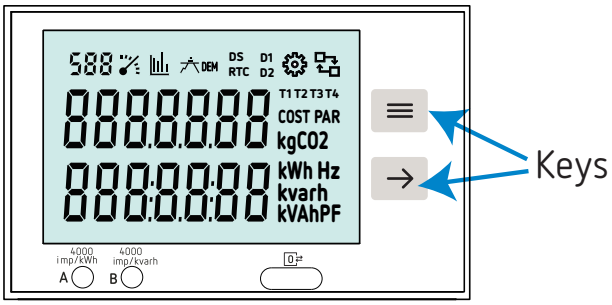

Figure 17: Keys on the CEM-D21x/CEM-D31x.

✓ Display screens (**Table 12**):

Table 12: Function of the keys on the measurement screens.

Key	Short keystroke	Long keystroke (> 3s)
≡	Previous screen.	
→	Next screen.	Access to display menu.

✓ Configuration screens (**Table 13**):

Table 13: Function of the keys on the configuration screens.

Key	Short keystroke	Long keystroke (> 3s)
≡	Enter edit mode. Skip digit.	Validate the data and exit edit mode.
→	Changes the digit's value. Change options.	Access the main menu screen.

4.3.- LED INDICATORS

The device has two verification LEDs, **Figure 18**, which emit pulses proportional to the energy measured.

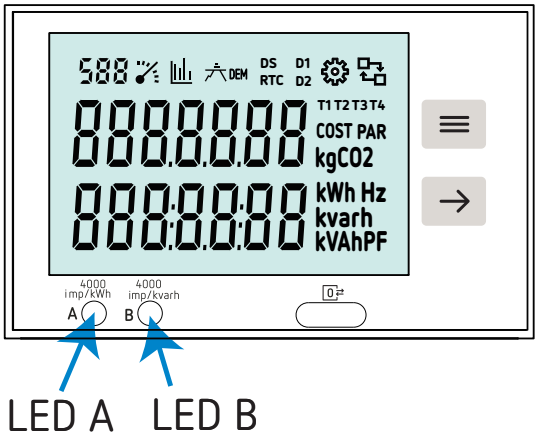

Figure 18: LEDs on the CEM-D21x/CEM-D31x.

✓**LED A**, to verify **active energy.**
✓**LED B**, to verify the **reactive energy**.

Table 14: Pulse rate of the LEDs.

Model	Pulse rate LED A	Pulse rate LED B
CEM-D21x CEM-D21x-MID	4000 imp/kWh	4000 imp/kvarh
CEM-D31x CEM-D31x-MID	20000 imp/kWh	20000 imp/kvarh

4.4. - PULSE OUTPUT

The **CEM-D210, CEM-D210-MID, CEM-D310** and **CEM-D310-MID** models have an opto-coupler output (terminals 15 and 16 of **Table 4** and **Table 7**) that can generate pulses at a preset cadence. (See ***"6.13 - OUTPUT"*** *and* ***"7.3.4 - CONFIGURATION PARAMETERS"***).

4.5.- DIGITAL INPUTS

The **CEM-D211, CEM-D212, CEM-D211-MID, CEM-D212-MID, CEM-D311, CEM-D312, CEM-D311-MID** and **CEM-D312-MID** models have 2 digital inputs (terminals 15, 16 and 17 of the devices), **Figure 19**.

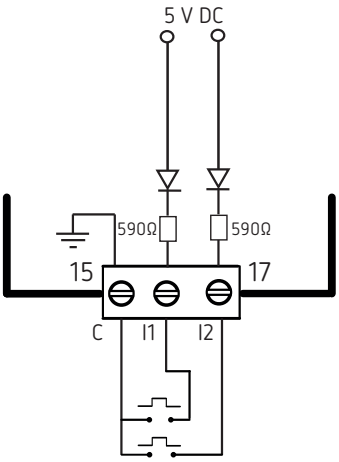

Figure 19: Digital inputs.

✓**Digital input 1 (I1),**

Digital input 1 is used to select the tariff of the device. The devices have 2 ways to configure tariffs:

- **RTC Mode**, configuration of 4 tariffs based on the real-time clock RTC.
- **DS Mode**, configuration of 2 tariffs through Digital Input 1, **Table 15**.

Table 15: DS Tariff Rates.

Tariff	Digital Input I1
1	0
2	1

The tariff configuration mode is selected in section ***"6.7 - TARIFF MODE"*.**

✓**Digital input 2 (I2),**

Digital input 2 can be configured as a pulse counter or as a logical input, see ***"6.11 - DIGITAL INPUT 2"*.**

4.6. - OPTICAL PORT

The device has an optical communications port, as per the **UNE-EN 62052-11** standard, **Figure 20**.

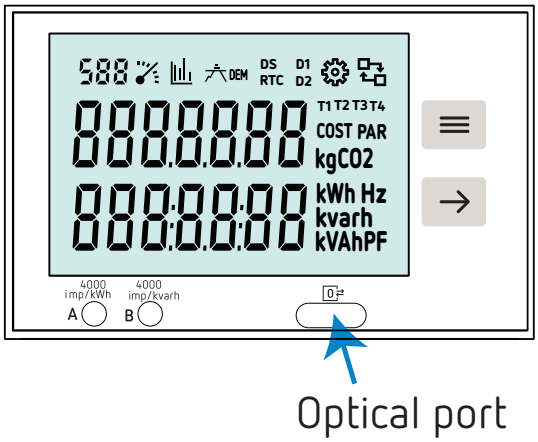

Figure 20: Optical port on the CEM-D21x/CEM-D31x.

The communications protocol depends on the device model:

✓ **CEM-D211, CEM-D211-MID, CEM-D311** and **CEM-D311-MID**, Modbus protocol.

✓ **CEM-D212, CEM-D212-MID, CEM-D312** and **CEM-D312-MID**, M-BUS protocol.

5.- DISPLAY

Once the device is turned on, the display shows the firmware version, after 7 seconds the device shows screen 1 of the **Default** menu.

The **CEM-D21x/CEM-D31x** has 5 display menus and 1 configuration menu, see **Figure 21**.

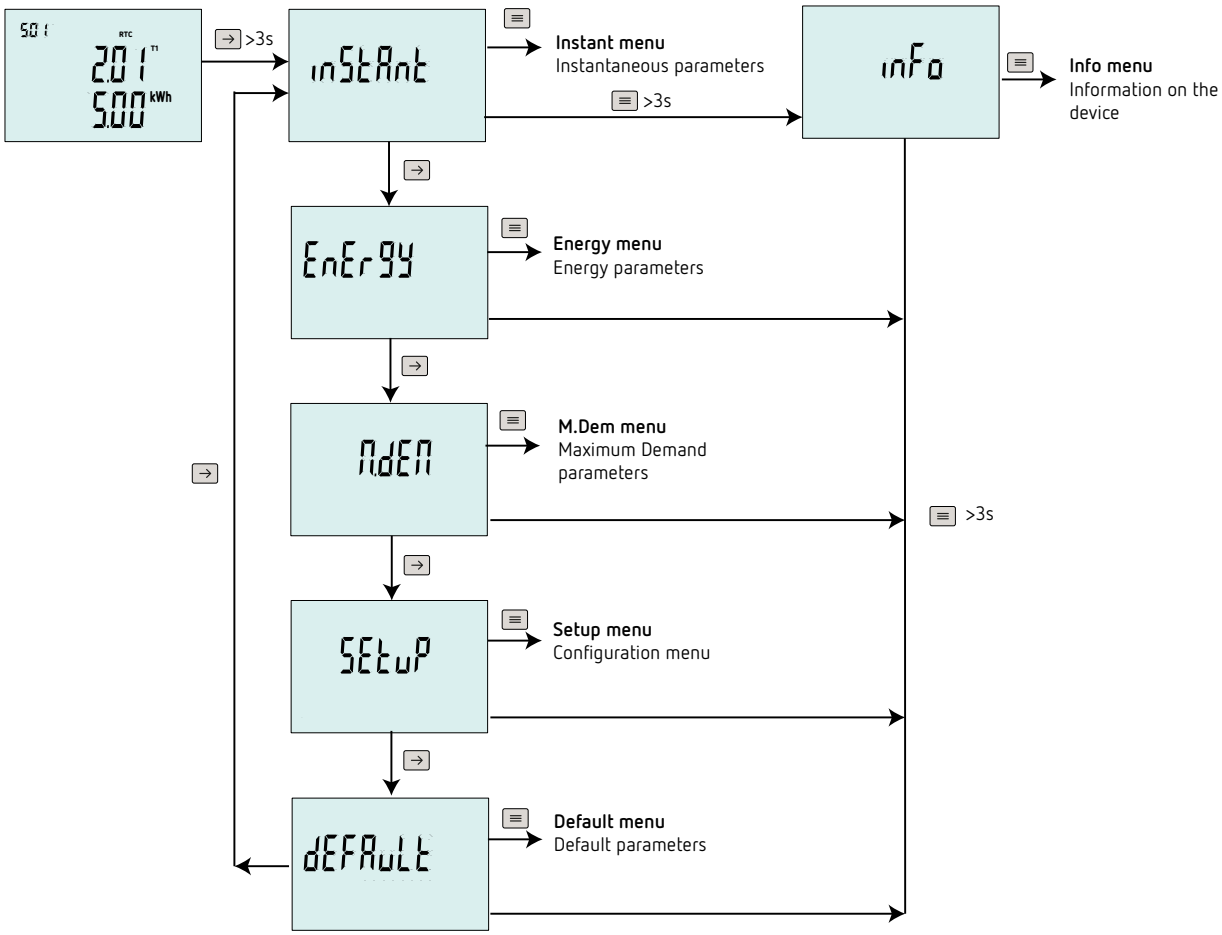

Figure 21: Display menu.

See *"6.- CONFIGURATION MENU"* to access the device's setup menu.

5.1.- **DEFAULT** MENU

This menu shows the main parameters of the device.
The display can rotate through the screens without having to press any keys on the **CEM-D21x/CEM-D31x**, or by pressing the keys.
See ***"6.8 - SCROLL"*** to program the screen scrolling.

The device is in this mode by default, as long as the keys are not pressed.

Short press the key ≡ to enter the menu.

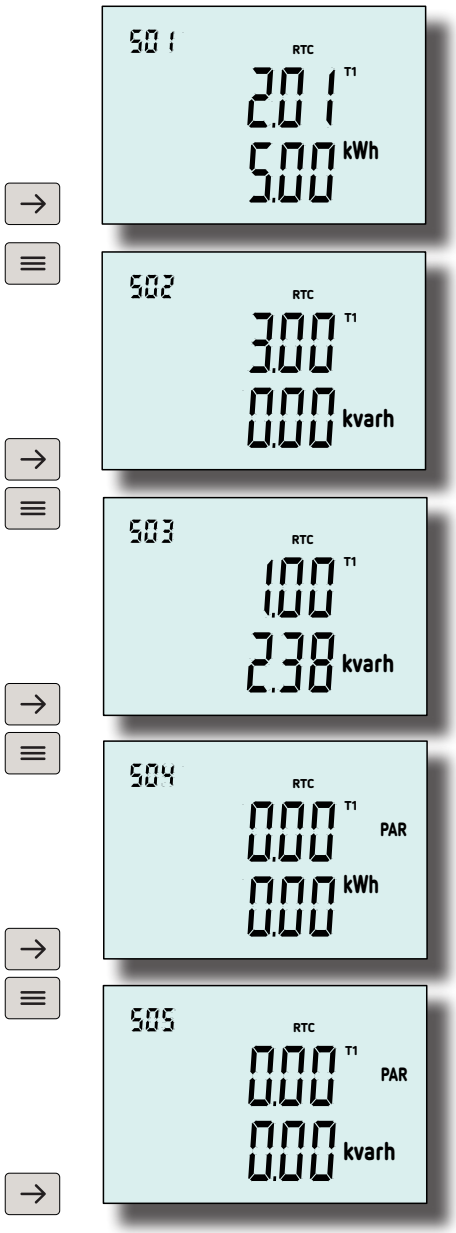

Total active energy imported (kWh)
Total active energy exported (kWh)[1]

Total reactive energy quadrant 1 (Q1) (kvarh)
Total reactive energy quadrant 2 (Q2) (kvarh) [1]

Total reactive energy quadrant 3 (Q3) (kvarh) [1]
Total reactive energy quadrant 4 (Q4) (kvarh)

Partial imported active energy (kWh)
Partial exported active energy (kWh) [1]
Note: *In the **CEM-210**, **CEM-210-MID**, **CEM-310** and **CEM-310-MID** models, this screen is not shown.*

Partial reactive energy quadrant 1 (Q1) (kvarh)
Partial reactive energy quadrant 2 (Q2) (kvarh) [1]
Note: *In the **CEM-210**, **CEM-210-MID**, **CEM-310** and **CEM-310-MID** models, this screen is not shown.*

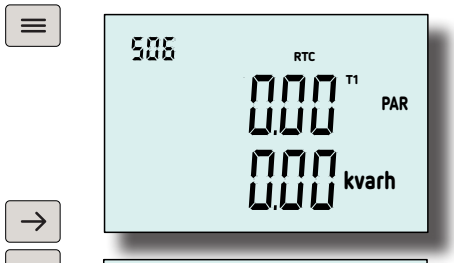

Partial reactive energy quadrant 3 (Q3) (kvarh) [1]
Partial reactive energy quadrant 4 (Q4) (kvarh)
Note: *In the **CEM-210**, **CEM-210-MID**, **CEM-310** and **CEM-310-MID** models, this screen is not shown.*

Date
Time
Note: *In the **CEM-210**, **CEM-210-MID**, **CEM-310** and **CEM-310-MID** models, this screen is not shown.*

[1] Variable not visible if the device has been configured to measure in 2 quadrants (consumption), see ***"6.3.- MODE CODE"***.

If there is a short press of the key the previous screen is displayed and when the key is pressed, the next screen is displayed.

5.2.- **INSTANT** MENU

The **INSTANT** menu shows the instantaneous parameters of the device. The screens are identified with the icon , at the top right of the display.
The display can rotate through the screens without having to press any keys on the **CEM-D21x/CEM-D31x**, or by pressing the keys.
See ***"6.8 - SCROLL"*** to program the screen scrolling.

Short press the key to enter the menu.

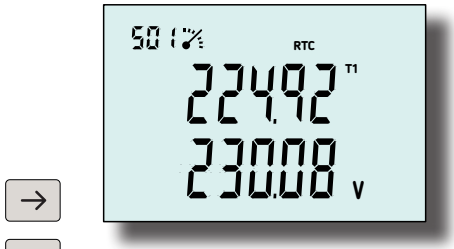

Voltage L1 (V)
Voltage L2 (V)

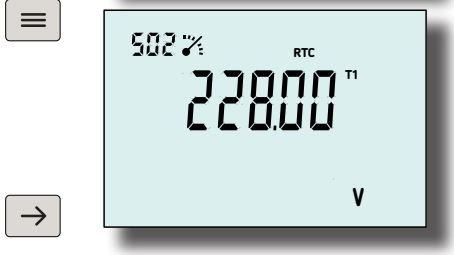

Voltage L3 (V)

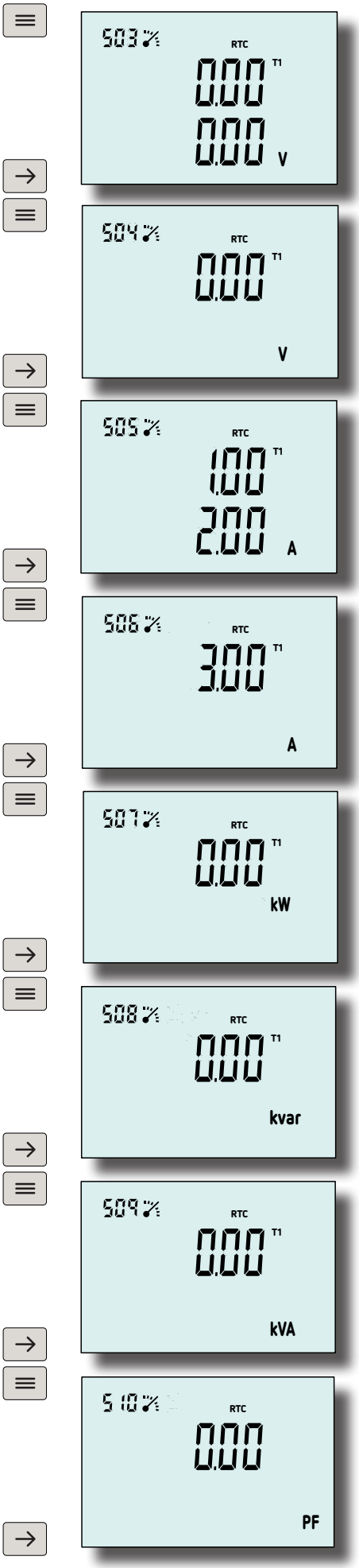

Voltage L1-L2 (V)
Voltage L2-L3 (V)

Voltage L3-L1 (V)

Current L1 (A)
Current L2 (A)

Current L3 (A)

Active Power III (kW)

Reactive Power III (kvar)

Apparent Power III (kVA)

Power factor III

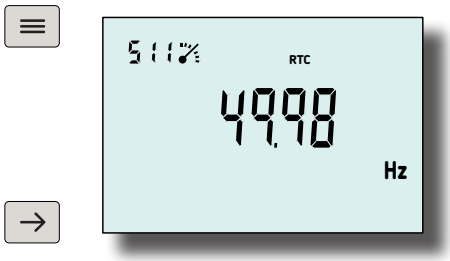

Frequency (Hz)

If there is a short press of the key the previous screen is displayed and when the key is pressed, the next screen is displayed.

5.3. - **ENERGY** MENU

The **ENERGY** menu shows the energy parameters of the device. The screens are identified with the icon , at the top of the display.
The display can rotate through the screens without having to press any keys on the **CEM-D21x/CEM-D31x**, or by pressing the keys.
See *"6.8 - SCROLL"* to program the screen scrolling.

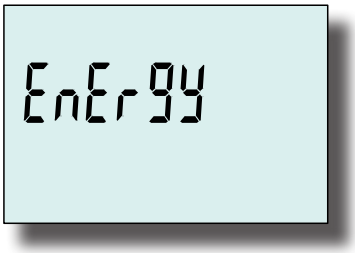

Short press the key to enter the menu.

5.3.1. - CEM-D210, CEM-D210-MID, CEM-D310 and CEM-D310-MID MODELS

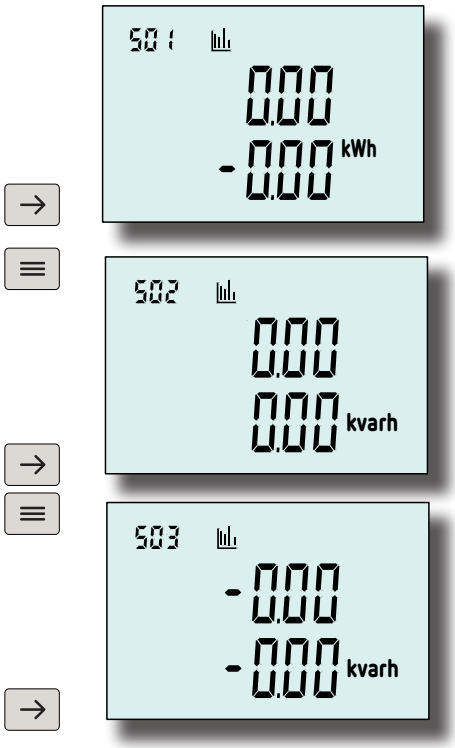

Active energy imported (kWh)
Active energy exported (kWh) [2]

Reactive energy quadrant 1 (Q1) (kvarh)
Reactive energy quadrant 2 (Q2) (kvarh) [2]

Reactive energy quadrant 3 (Q3) (kvarh) [2]
Reactive energy quadrant 4 (Q4) (kvarh)

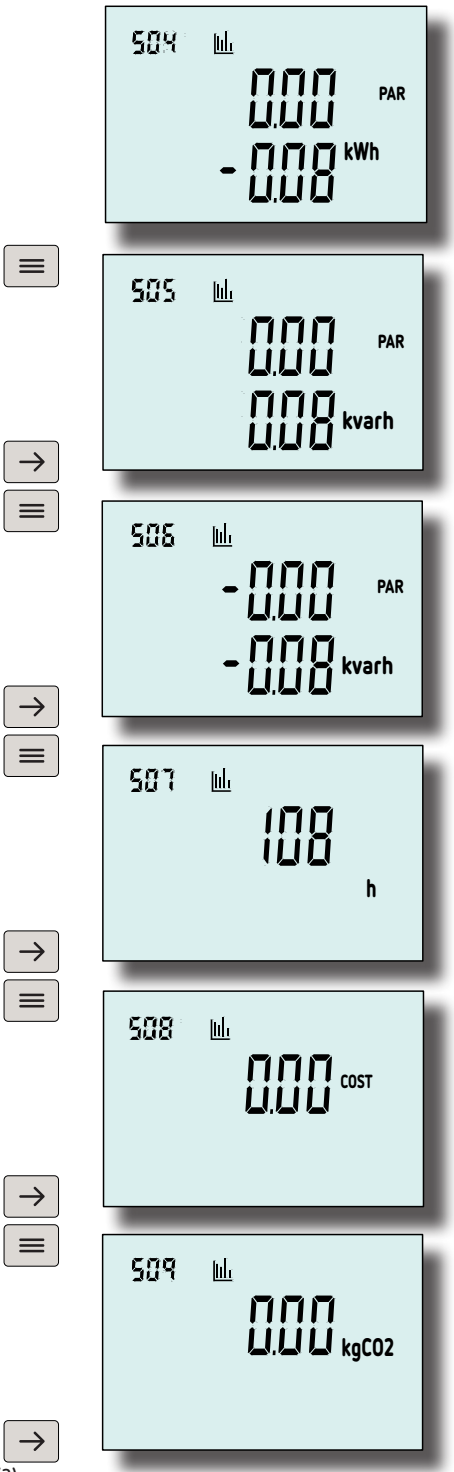

Partial imported active energy (kWh)
Partial exported active energy (kWh) [2]

Partial reactive energy quadrant 1 (Q1) (kvarh)
Partial reactive energy quadrant 2 (Q2) (kvarh) [2]

Partial reactive energy quadrant 3 (Q3) (kvarh) [2]
Partial reactive energy quadrant 4 (Q4) (kvarh)

Operating hours (h)

Cost of Energy consumed [3]

Carbon emissions of Energy consumed ($kgCO_2$)

[2] Variable not visible if the device has been configured to measure in 2 quadrants (consumption), see *"6.3.- MODE CODE"*.
[3] The variable is not visible if the device does not calculate the energy efficiency parameters, see *"6.9.- EFFICIE"*.

If there is a short press of the key ≡ the previous screen is displayed and when the key → is pressed, the next screen is displayed.

5.3.2.- CEM-D211, CEM-D211-MID, CEM-D212, CEM-D212-MID, CEM-D311, CEM-D311-MID, CEM-D312 and CEM-D312-MID MODELS

The device has two ways to configure tariffs:

- ✓ **RTC Mode**, configuration of 4 tariffs based on the real-time clock RTC. The screen is identified with the text **RTC** at the top of the display.
- ✓ **DS Mode**, configuration of 2 tariffs through Digital Input 1. The screen is identified with the text **DS** at the top of the display.

The tariff configuration mode is selected in section ***"6.7 - TARIFF MODE"*.**

Note: *The device only displays the screens corresponding to the programme tariffs, see* **"7.3.5 - TARIFFS."**

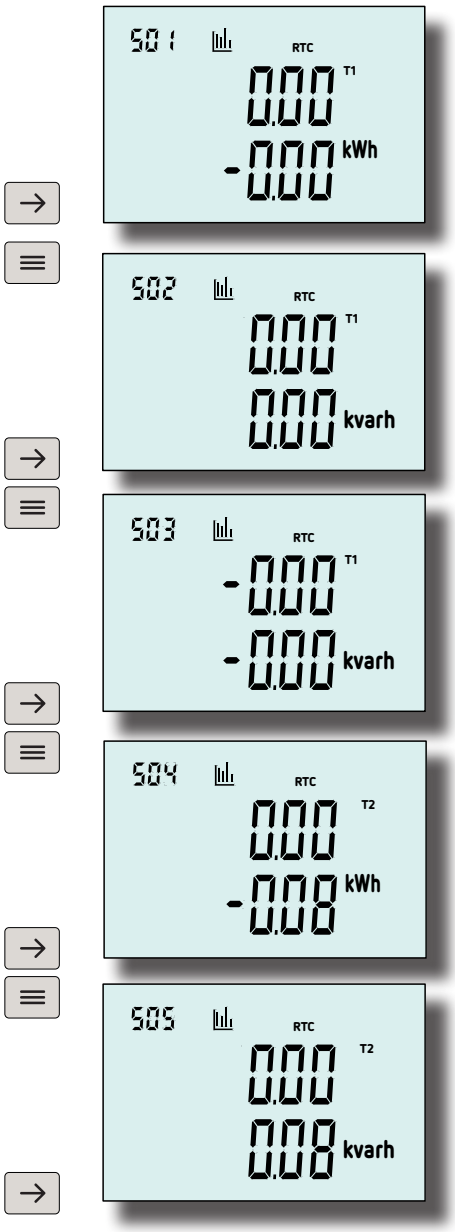

Imported active energy Tariff 1 (kWh)
Exported active energy Tariff 1 (kWh) (4)

Reactive energy quadrant 1 (Q1) Tariff 1 (kvarh)
Reactive energy quadrant 2 (Q2) Tariff 1 (kvarh) (4)

Reactive energy quadrant 3 (Q3) Tariff 1 (kvarh) (4)
Reactive energy quadrant 4 (Q4) Tariff 1 (kvarh)

Imported active energy Tariff 2 (kWh)
Exported active energy Tariff 2 (kWh) (4)

Reactive energy quadrant 1 (Q1) Tariff 2 (kvarh)
Reactive energy quadrant 2 (Q2) Tariff 2 (kvarh) (4)

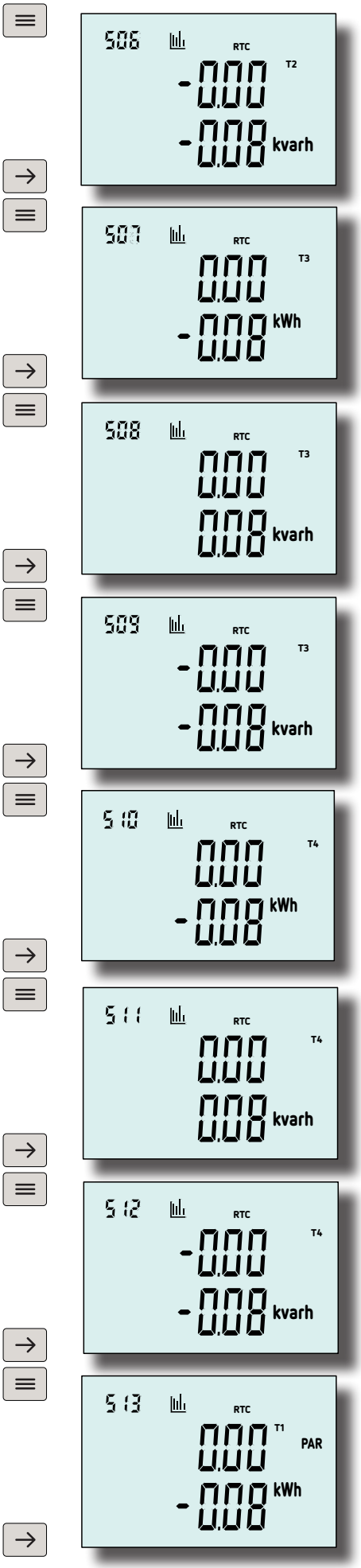

Reactive energy quadrant 3 (Q3) Tariff 2 (kvarh) (4)
Reactive energy quadrant 4 (Q4) Tariff 2 (kvarh)

Imported active energy Tariff 3 (kWh)
Exported active energy Tariff 3 (kWh) (4)

Reactive energy quadrant 1 (Q1) Tariff 3 (kvarh)
Reactive energy quadrant 2 (Q2) Tariff 3 (kvarh) (4)

Reactive energy quadrant 3 (Q3) Tariff 3 (kvarh) (4)
Reactive energy quadrant 4 (Q4) Tariff 3 (kvarh)

Imported active energy Tariff 4 (kWh)
Exported active energy Tariff 4 (kWh) (4)

Reactive energy quadrant 1 (Q1) Tariff 4 (kvarh)
Reactive energy quadrant 2 (Q2) Tariff 4 (kvarh) (4)

Reactive energy quadrant 3 (Q3) Tariff 4 (kvarh) (4)
Reactive energy quadrant 4 (Q4) Tariff 4 (kvarh)

Partial imported active energy Tariff 1 (kWh)
Partial exported active energy Tariff 1 (kWh) (4)

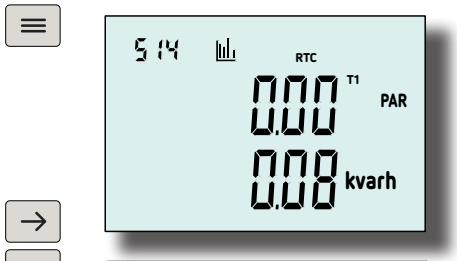

Partial reactive energy quadrant 1 (Q1) Tariff 1 (kvarh)
Partial reactive energy quadrant 2 (Q2) Tariff 1 (kvarh) (4)

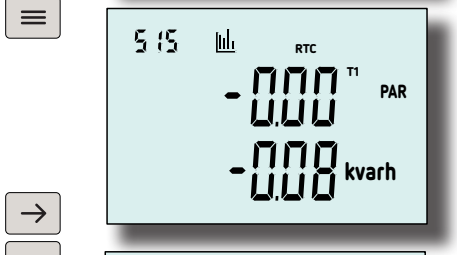

Partial reactive energy quadrant 3 (Q3) Tariff 1 (kvarh) (4)
Partial reactive energy quadrant 4 (Q4) Tariff 1 (kvarh)

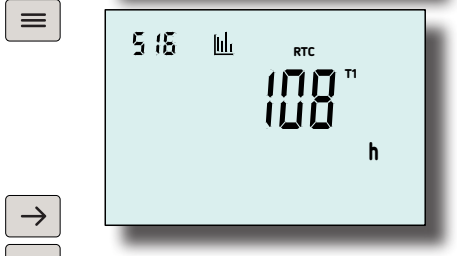

Operating hours Tariff 1 (h)

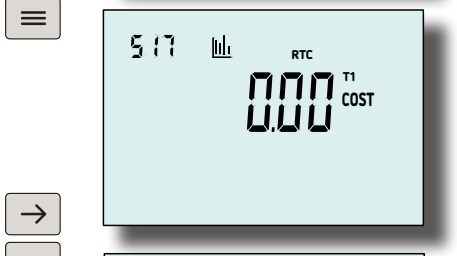

Cost of Energy consumed Tariff 1 (5)

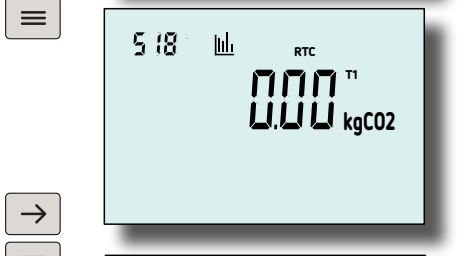

Carbon emissions of Energy consumed Tariff 1 ($kgCO_2$) (5)

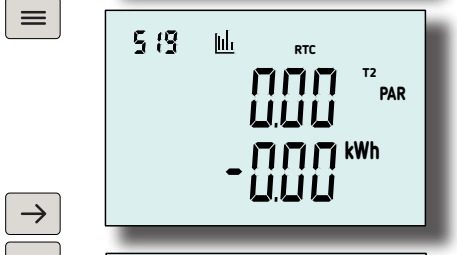

Partial imported active energy Tariff 2 (kWh)
Partial exported active energy Tariff 2 (kWh) (4)

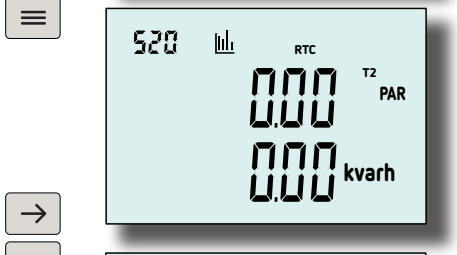

Partial reactive energy quadrant 1 (Q1) Tariff 2 (kvarh)
Partial reactive energy quadrant 2 (Q2) Tariff 2 (kvarh) (4)

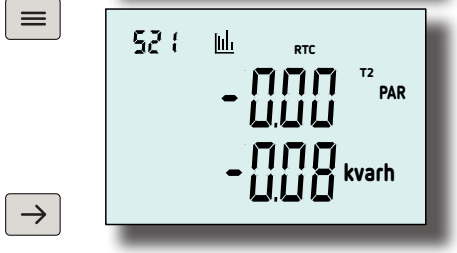

Partial reactive energy quadrant 3 (Q3) Tariff 2 (kvarh) (4)
Partial reactive energy quadrant 4 (Q4) Tariff 2 (kvarh)

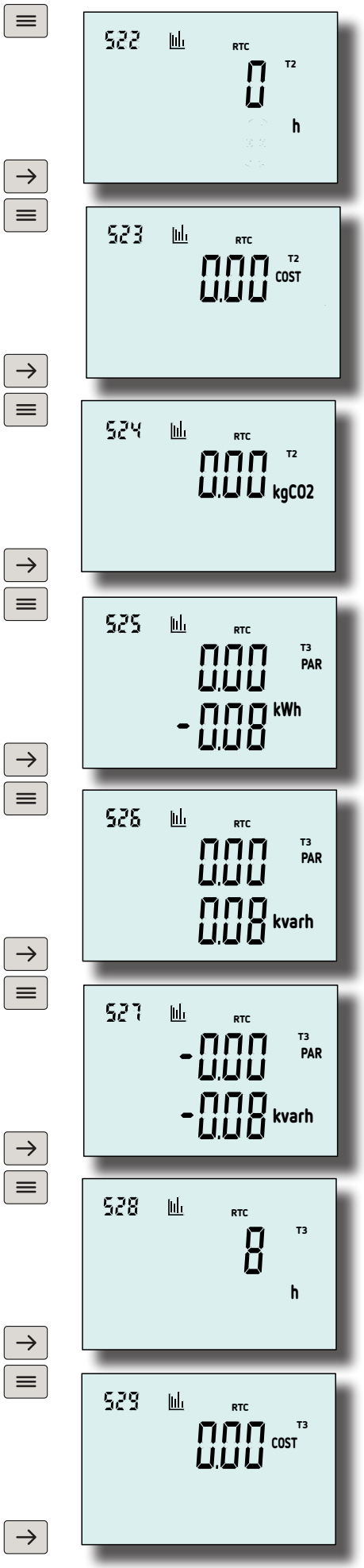

Operating hours Tariff 2 (h)

Cost of Energy consumed Tariff 2 (5)

Carbon emissions of Energy consumed Tariff 2 ($kgCO_2$) (5)

Partial imported active energy Tariff 3 (kWh)
Partial exported active energy Tariff 3 (kWh) (4)

Partial reactive energy quadrant 1 (Q1) Tariff 3 (kvarh)
Partial reactive energy quadrant 2 (Q2) Tariff 3 (kvarh) (4)

Partial reactive energy quadrant 3 (Q3) Tariff 3 (kvarh) (4)
Partial reactive energy quadrant 4 (Q4) Tariff 3 (kvarh)

Operating hours Tariff 3 (h)

Cost of Energy consumed Tariff 3 (5)

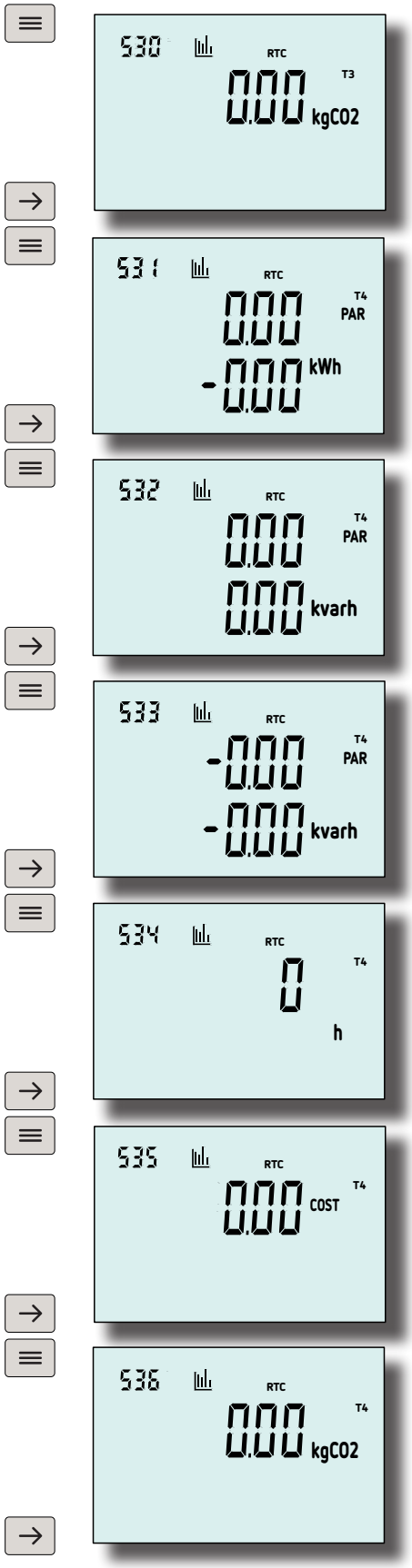

Carbon emissions of Energy consumed Tariff 3 ($kgCO_2$) [5]

Partial imported active energy Tariff 4 (kWh)
Partial exported active energy Tariff 4 (kWh) [4]

Partial reactive energy quadrant 1 (Q1) Tariff 4 (kvarh)
Partial reactive energy quadrant 2 (Q2) Tariff 4 (kvarh) [4]

Partial reactive energy quadrant 3 (Q3) Tariff 4 (kvarh) [4]
Partial reactive energy quadrant 4 (Q4) Tariff 4 (kvarh)

Operating hours Tariff 4 (h)

Cost of energy consumed Tariff 4 [5]

Carbon emissions of Energy consumed Tariff 4 ($kgCO_2$) [5]

[5] Variable not visible if the device has been configured to measure in 2 quadrants (consumption), see *"6.3.- MODE CODE"*.
[6] The variable is not visible if the device does not calculate the energy efficiency parameters, see *"6.9.- EFFICIE"*.

If there is a short press of the key ≡ the previous screen is displayed and when the key → is pressed, the next screen is displayed.

5.4.- **M.DEM** MENU

The **M.DEM** menu shows the Maximum Demand parameters. The screens are identified with the icon DEM, at the top right of the display.
The display can rotate through the screens without having to press any keys on the **CEM-D21x/CEM-D31x**, or by pressing the keys.
See *"6.8 - SCROLL"* to program the screen scrolling.

Short press the key ≡ to enter the menu.

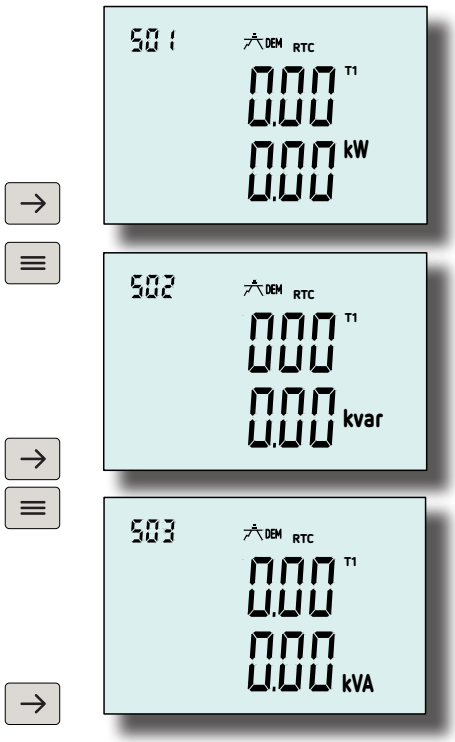

Maximum Demand Imported Active Power III (kW)
Maximum Demand Exported Active Power III (kW)

Maximum Demand Imported Reactive Power III (kvar)
Maximum Demand Exported Reactive Power III (kvar)

Maximum Demand Imported Apparent Power III (kVA)
Maximum Demand Exported Apparent Power III (kVA)

If there is a short press of the key ≡ the previous screen is displayed and when the key → is pressed, the next screen is displayed.

5.5.-INFORMATION MENU

The **Info** menu shows information on the device.

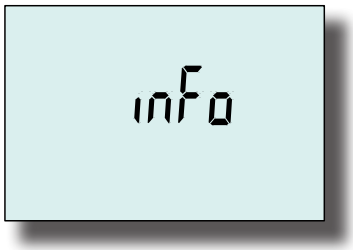

Hold down the key ≡ to enter the menu.

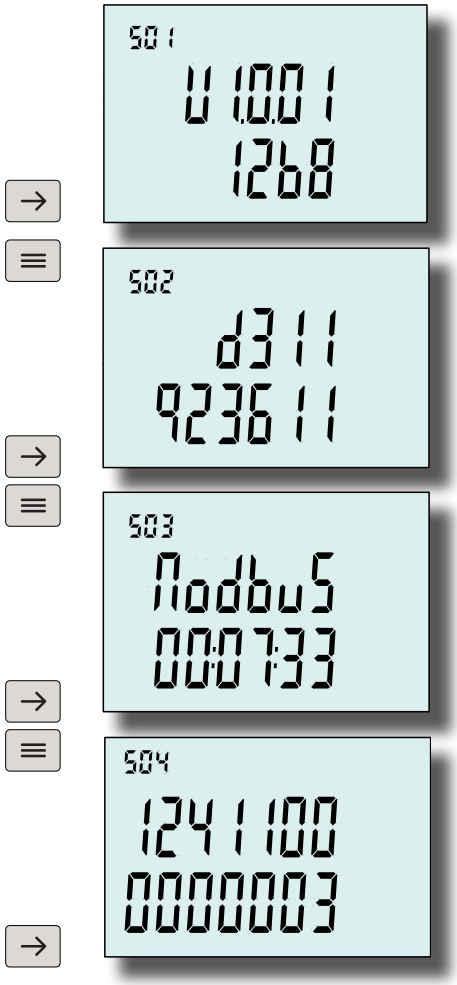

Firmware version of the device.
CRC

Device model.
Code of the device.

Communications available on the device.
Device runtime.

Device serial number.

If there is a short press of the key ≡ the previous screen is displayed and when the key → is pressed, the next screen is displayed.

Press the key → > 3 Seconds to exit the **Info** menu.

6.- CONFIGURATION MENU

The password screen of the configuration menu is accessible from the main page of the Configuration menu, **Figure 22**.

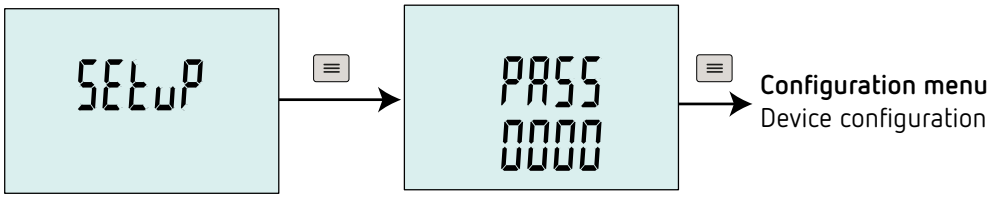

Figure 22:Access to Configuration menu.

Once the password screen is displayed, **Figure 23**.

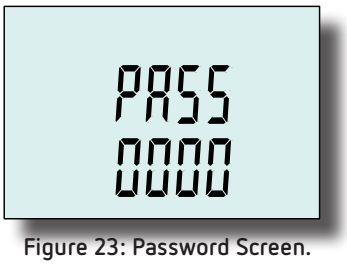

Figure 23: Password Screen.

Use key → to modify the digit's value.

Use key ≡ key to skip digits.

To validate the value, press the key ≡ > 5 s. If the password is correct, the device will enter the configuration menu.

The display screens return after 15 seconds without a key press.

Default password: 0001

Note: *The login password can be change in section* ***"6.14 - PASSWORD".***

Use key → to navigate through the different configuration menus.

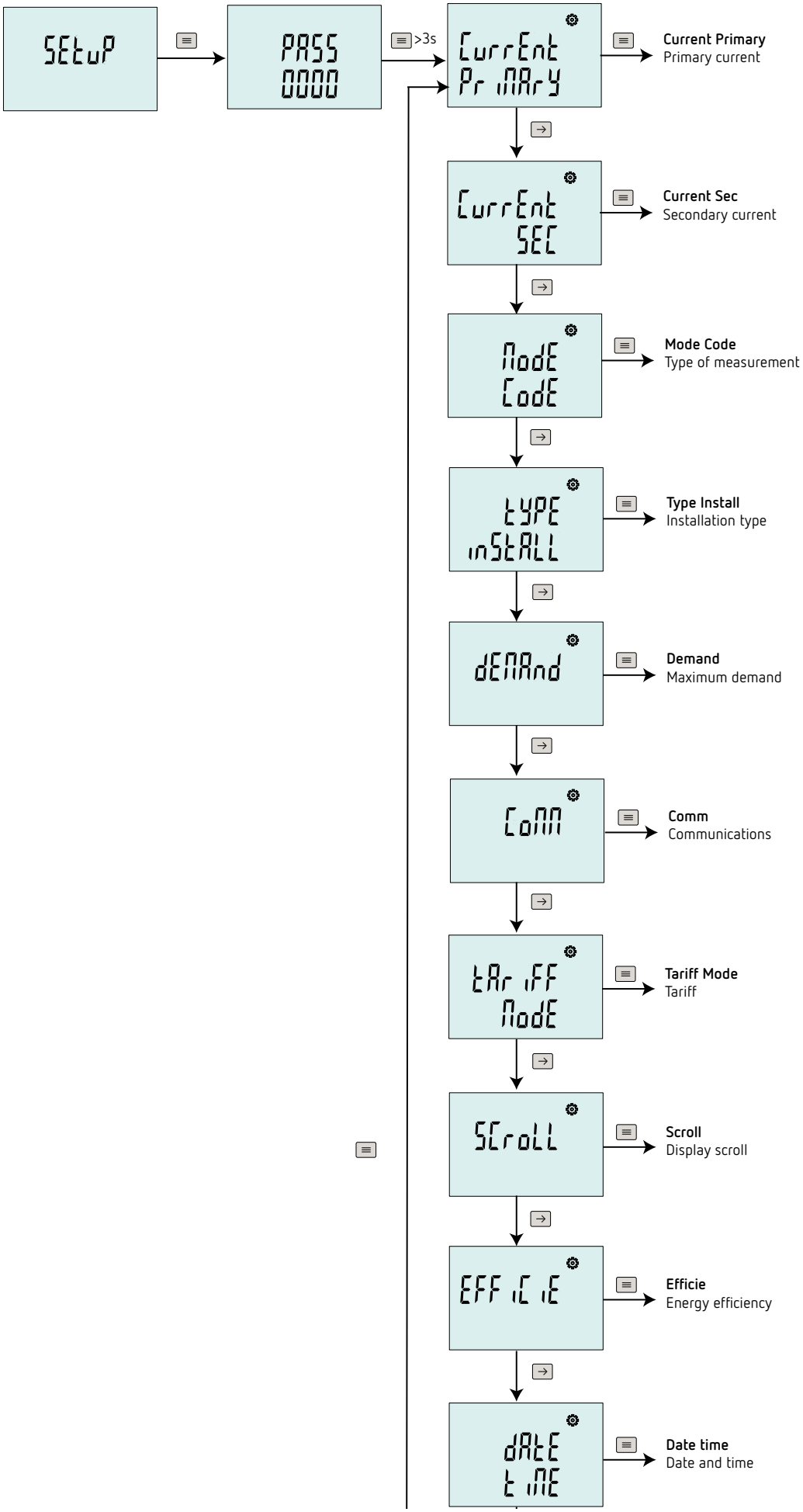
SEtuP
PASS
0000
>3s
CurrEnt
PrIMArY
Current Primary
Primary current
CurrEnt
SEC
Current Sec
Secondary current
ModE
CodE
Mode Code
Type of measurement
tYPE
InSTALL
Type Install
Installation type
dEMAnd
Demand
Maximum demand
CoMM
Comm
Communications
tArIFF
ModE
Tariff Mode
Tariff
SCroLL
Scroll
Display scroll
EFFICIE
Efficie
Energy efficiency
dAtE
tIME
Date time
Date and time

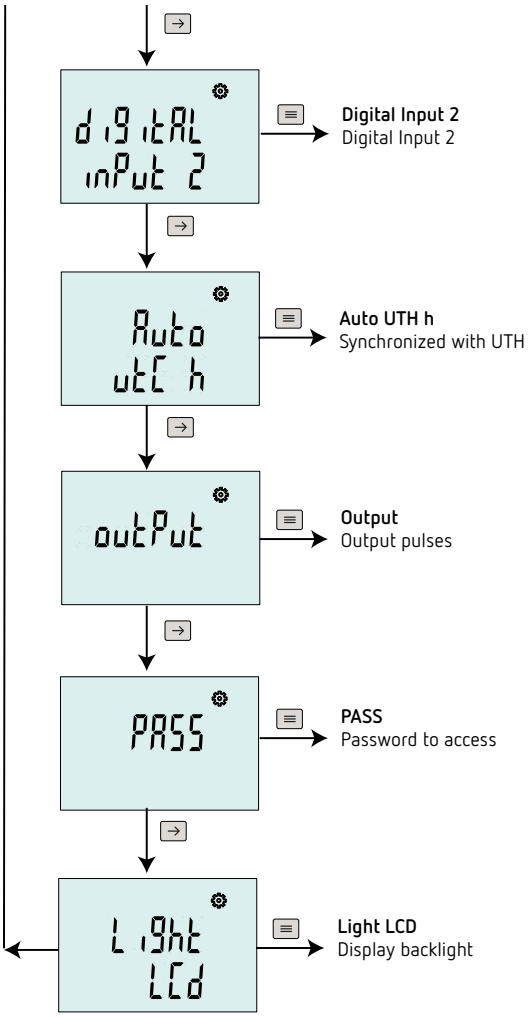

Figure 24:Configuration menu.

Note: *Depending on the model, some screens are not visible.*

Hold down the key [→] > 5 s. to exit the configuration menu.

6.1.- CURRENT PRIMARY

Note: *Menu visible on the **CEM-D311**, **CEM-D311-MID**, **CEM-D312** and **CEM-D312-MID** models.*

This section is used to program the value of the primary current in the measurement transformers.

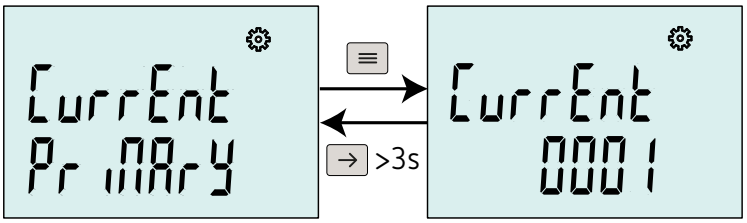

Figure 25: Primary Current Menu.

Hold down the key [≡] to enter edit mode, the value to be edited flashes.

Use key [→] to modify the digit's value.

Use key [≡] to skip digits.

To validate the value and exit edit mode, press the key ≡ > 3 s.

✓Configuration values

Table 16: Configuration values: Current Primary

	Current Primary
Minimum value	1
Maximum value	9999

Press the key → > 3 s to access the main screen of the **Current Primary** menu.
Press the key → to navigate through the different configuration menus.

6.2.- CURRENT SEC

Note: *Menu visible on the **CEM-D311**, **CEM-D311-MID**, **CEM-D312** and **CEM-D312-MID** models.*
Note: *In the **CEM-D311-MID** and **CEM-D312-MID** models, the screen cannot be edited.*

This section is used to select the value of the secondary current in the measurement transformers.

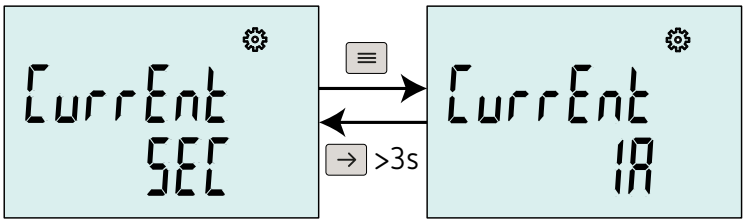

Figure 26: Current Sec Menu.

Hold down the key ≡ to enter edit mode, the value to be edited flashes.
Use key → to change options.

To validate the value and exit edit mode, press the key ≡ > 3 s.

✓Configuration values

Table 17: Configuration values: Current Sec.

	Current Sec
Possible values	1 A
	5 A

Press the key → > 3 s to access the main screen of the **Current Sec** menu.
Press the key → to navigate through the different configuration menus.

6.3.- MODE CODE

This section is used to select the type of measurement of the device, whether in 2 or 4 quadrants.

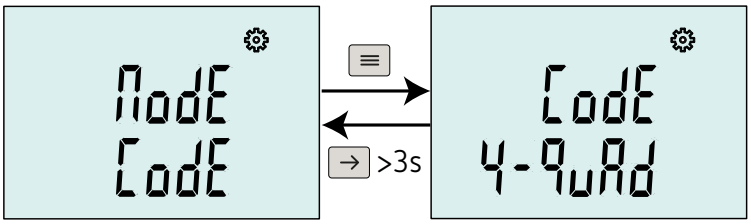

Figure 27: Menu Code.

Hold down the key ≡ to enter edit mode, the value to be edited flashes.
Use key → to change options.

To validate the value and exit edit mode, press the key ≡ > 3 s.

✓**Configuration values**

Table 18: Configuration values: Mode code.

	Mode code
Possible values	2-QuAd, 2 quadrants (consumption)
	4-QuAd, 4 quadrants (consumption and generation)

Press the key → > 3 s to access the main screen of the **Mode Code** menu.
Press the key → to navigate through the different configuration menus.

6.4.- TYPE INSTALL

This section is used to select the installation type of the device.

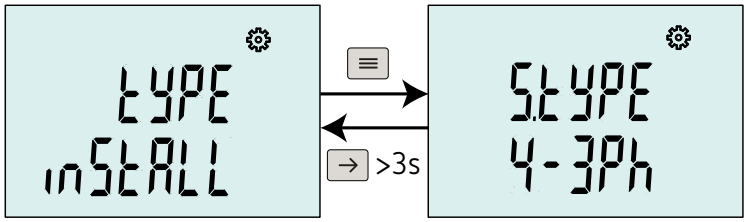

Figure 28: Type Install.

Hold down the key ≡ to enter edit mode, the value to be edited flashes.
Use key → to change options.

To validate the value and exit edit mode, press the key ≡ > 3 s.

✓Configuration values

Table 19: Configuration values: Type Install.

	Type Install
Possible values	4-3Ph,Three-phase network measurement with 4-wire connection.
	3-3Ph,Three-phase network measurement with 3-wire connection.

Press the key → > 3 s to access the main screen of the **Type Install** menu.

Press the key → to navigate through the different configuration menus.

6.5.- DEMAND

This menu is used to select how maximum demand works.

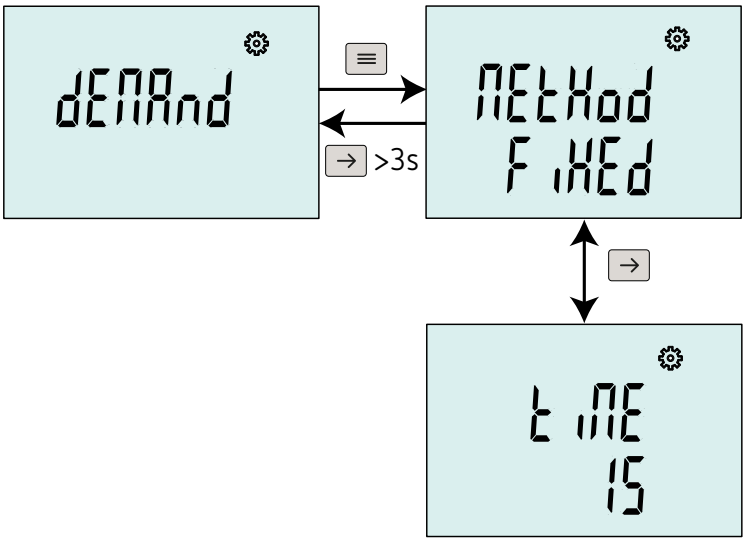

Figure 29: Demand Menu.

6.5.1. - METHOD

In this section, the method for calculating maximum demand is selected.

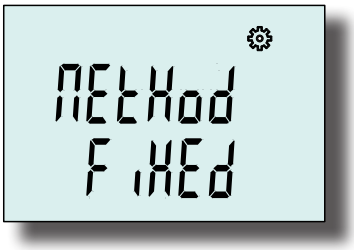

Hold down the key ≡ to enter edit mode, the value to be edited flashes.

Use key → to change options.

To validate the value and exit edit mode, press the key ≡ > 3 s.

✓Configuration values

Table 20: Configuration values: Method.

	Method
Possible values	F iHEd, Fixed Window.
	SLI dI n9, Sliding Window

Press the key → to skip to the next configuration parameter.

6.5.2. - INTEGRATION PERIOD

This section is used to select the integration period for calculating the maximum demand.

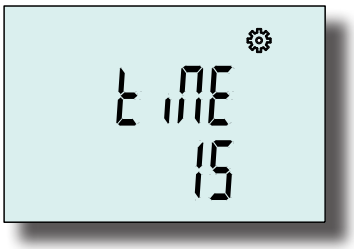

Hold down the key ≡ to enter edit mode, the value to be edited flashes.
Use key → to modify the digit's value.
Use key ≡ to skip digits.

To validate the value and exit edit mode, press the key ≡ > 3 s.

✓Configuration values

Table 21: Configuration values: Integration period.

	Integration period
Minimum value	1 minute
Maximum value	30 minutes

Press the key → > 3 s to access the main screen of the **Demand** menu.
Press the key → to navigate through the different configuration menus.

6.6.- COMM

Note: *Menu visible on the* ***CEM-D211, CEM-D212, CEM-D11-MID, CEM-D12-MID, CEM-D311, CEM-D312, CEM-D311-MID and CEM-D312-MID*** *models.*
This menu is used to configure the parameters of the RS-485 or M-BUS communications.

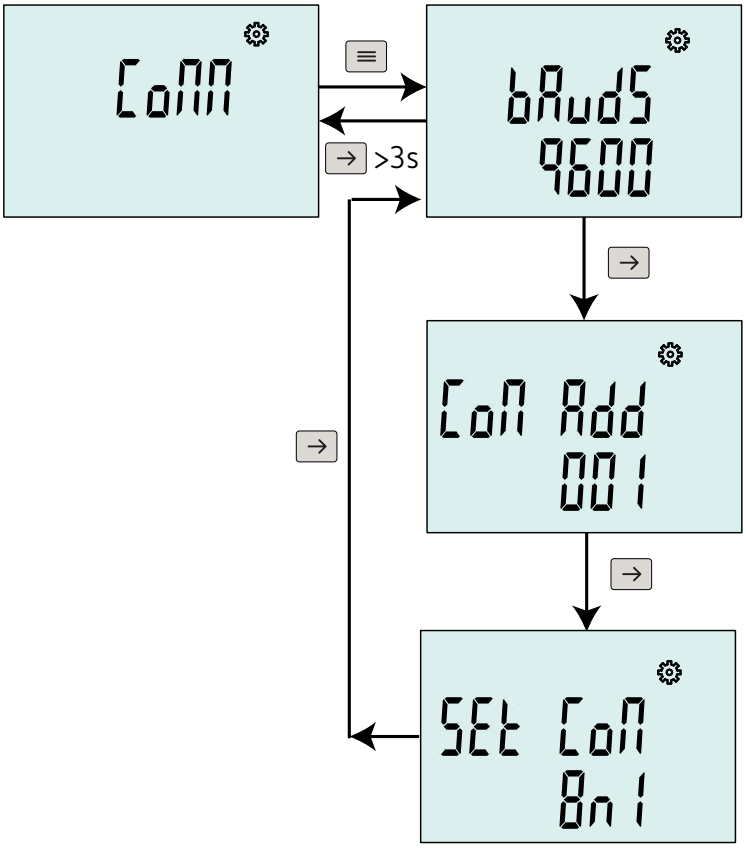

Figure 30: Comm menu.

6.6.1. - BAUD RATE

This screen is used to select the baud rate of the communications.

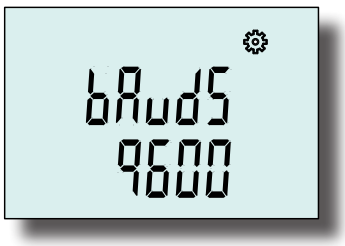

Hold down the key ≡ to enter edit mode, the value to be edited flashes.
Use key → to change options.

To validate the value and exit edit mode, press the key ≡ > 3 s.

✓Configuration values

Table 22: Configuration values: Baud rate

		Baud rate		
Possible values	RS-485	9600 bps	19200 bps	38400 bps
		57600 bps	115200 bps	
	M-BUS	300 bps	600 bps	1200 bps
		2400 bps	4800 bps	9600 bps

Press the key → to skip to the next configuration parameter.

6.6.2.- ADDRESS OF PERIPHERAL

This screen is used to program the address of the peripheral.

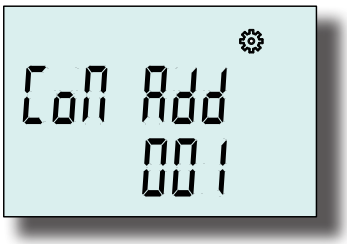

Hold down the key ≡ to enter edit mode, the value to be edited flashes.
Use key → to modify the digit's value.
Use key ≡ to skip digits.

To validate the value and exit edit mode, press the key ≡ > 3 s.

✓Configuration values

Table 23: Configuration values: Address of peripheral.

Address of peripheral	
Minimum value	1
Maximum value	255

Press the key → to skip to the next configuration parameter.

6.6.3. - DATA BITS, PARITY, STOP BITS

This screen is used to program the communications parameters: no. of data bits, parity and no. of stop bits.

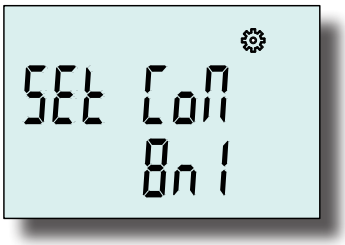

Hold down the key ≡ to enter edit mode, the value to be edited flashes.
Use key → to change options.

To validate the value and exit edit mode, press the key ≡ > 3 s.

✓**Configuration values**

Table 24: Configuration values: Data bits, parity, stop bits.

	Data bits, parity, stop bits.
Possible values	8n 1, 8 data bits, no parity, 1 stop bit
	8n2, 8 data bits, no parity, 2 stop bits
	8o 1, 8 data bits, odd parity, 1 stop bit
	8E 1, 8 data bits, even parity, 1 stop bit

Press the key → > 3 s to access the main screen of the **Comm** menu.
Press the key → to navigate through the different configuration menus.

6.7.- TARIFF MODE

Note: *Menu visible on the* ***CEM-D211, CEM-D211-MID, CEM-D212, CEM-D212-MID, CEM-D311, CEM-D311-MID, CEM-D312*** *and* ***CEM-D312-MID*** *models.*

This section is used to select the tariff configuration number and mode on the device.

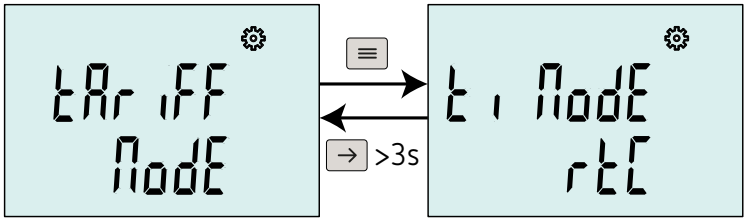

Figure 31: Tariff Mode Menu.

Hold down the key ≡ to enter edit mode, the value to be edited flashes.
Use key → to change options.

To validate the value and exit edit mode, press the key ≡ > 3 s.

✓**Configuration values**

Table 25: Configuration values: Tariff mode.

	Tariff mode
Possible values	RTC, configuration of 4 tariffs based on the real-time clock, RTC.
	dS, configuration of 2 tariffs through Digital Input 1.

Press the key → > 3 s to access the main screen of the **Tariff Mode** menu.
Press the key → to navigate through the different configuration menus.

6.8. - SCROLL

The display menu screens can be shown cyclically, without having to press any keys. This section is used to program the screen scroll time.

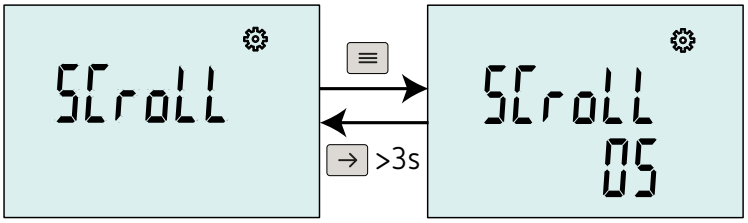

Figure 32: Scroll menu.

Hold down the key ≡ to enter edit mode, the value to be edited flashes.

Use key → to modify the digit's value.

Use key ≡ to skip digits.

To validate the value and exit edit mode, press the key ≡ > 3 s.

✓**Configuration values**

Table 26: Configuration values: Scroll.

	Scroll
0	Automatic screen scroll disabled
Minimum value	5 s
Maximum value	99 s

Press the key → > 3 s to access the main screen of the **Scroll** menu.

Press the key → to navigate through the different configuration menus.

6.9.- EFFICIE

This menu is used to select whether the device is going to calculate the energy efficiency parameters: Cost and carbon emissions.

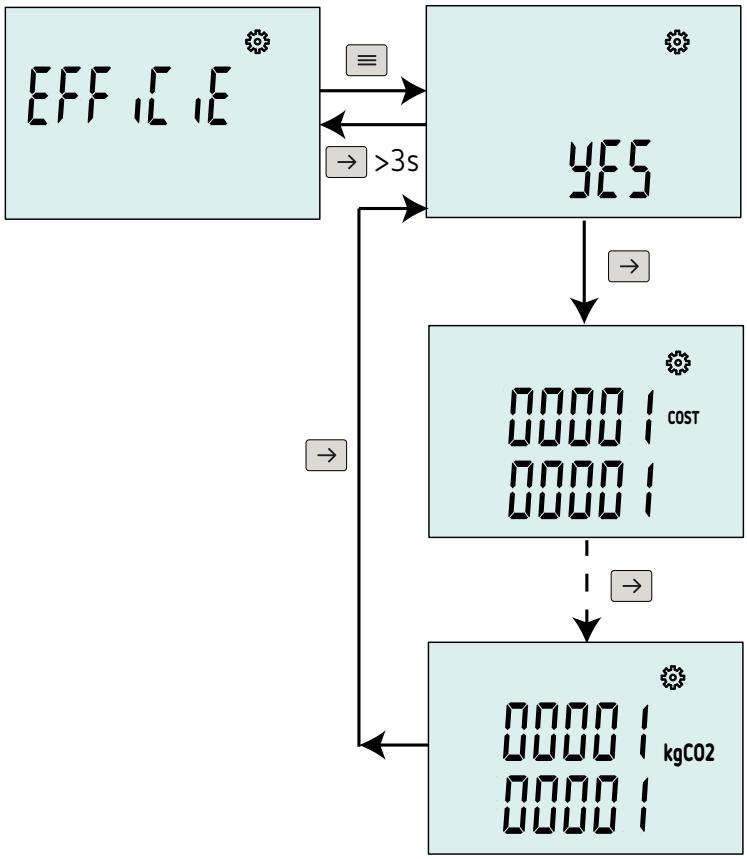

Figure 33: Efficie Menu.

6.9.1.- EFFICIENCY

This section is used to select whether the device is going to calculate the efficiency parameters.

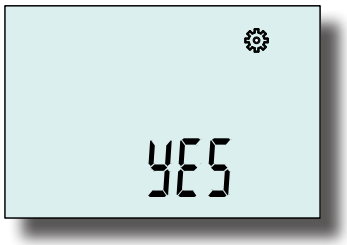

Hold down the key ≡ to enter edit mode, the value to be edited flashes.
Use key → to change options.

To validate the value and exit edit mode, press the key ≡ > 3 s.

✓Configuration values

Table 27: Configuration values: Efficiency.

	Efficiency
Possible values	YES, the efficiency is calculated.
	NO, the efficiency is not calculated.

If **YES** selected, press the key → to skip to the next configuration parameter.

6.9.2. - COST RATIO FOR ENERGY CONSUMED, TARIFFS T1 AND T2

This screen is used to program the cost per kWh of electricity for tariffs T1 and T2.

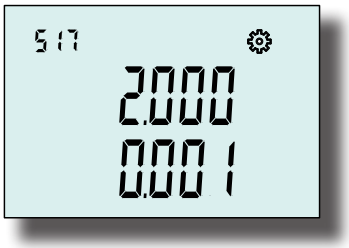

Hold down the key ≡ to enter edit mode, the text **S11** disappears and the value to be edited flashes.
Use key → to modify the digit's value.
Use key ≡ to skip digits.

To validate the value and exit edit mode, press the key ≡ > 3 s.

✓Configuration values

Table 28: Configuration values: Cost ratio.

Cost ratio	
Minimum value	0,000
Maximum value	2,000

Press the key → to skip to the next configuration parameter.

6.9.3. - COST RATIO FOR ENERGY CONSUMED, TARIFFS T3 AND T4

This screen is used to program the cost per kWh of electricity for tariffs T3 and T4.

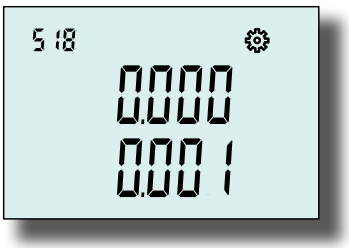

Hold down the key ≡ to enter edit mode, the text **S12** disappears and the value to be edited flashes.

Use key → to modify the digit's value.

Use key ≡ to skip digits.

To validate the value and exit edit mode, press the key ≡ > 3 s.

✓**Configuration values**

Table 29: Configuration values: Cost ratio.

Cost ratio	
Minimum value	0,000
Maximum value	2,000

Press the key → to skip to the next configuration parameter.

6.9.4. - RATIO OF CARBON EMISSIONS $kgCO_2$ FOR THE ENERGY CONSUMED, TARIFFS T1 AND T2

The carbon emission ratio is the amount of carbon released into the atmosphere to produce one unit of electricity (1 kWh). The European mix ratio is approximately 0.65 $kgCO_2$ per kWh.
This screen is used to program the emission ratio of tariffs T1 and T2.

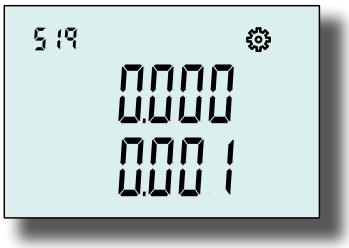

Hold down the key ≡ to enter edit mode, the text **S13** disappears and the value to be edited flashes.

Use key → to modify the digit's value.

Use key ≡ to skip digits.

To validate the value and exit edit mode, press the key ≡ > 3 s.

✓**Configuration values**

Table 30: Configuration values: Emission ratio.

Emission ratio	
Minimum value	0,000
Maximum value	2,000

Press the key → to skip to the next configuration parameter.

6.9.5. - RATIO OF CARBON EMISSIONS $kgCO_2$ FOR THE ENERGY CONSUMED, TARIFFS T3 AND T4

The carbon emission ratio is the amount of carbon released into the atmosphere to produce one unit of electricity (1 kWh). The European mix ratio is approximately 0.65 $kgCO_2$ per kWh.
This screen is used to program the emission ratio of tariffs T3 and T4.

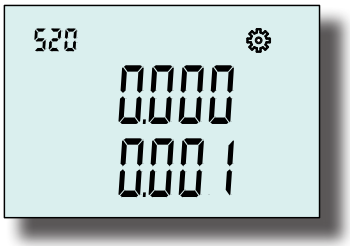

Hold down the key ≡ to enter edit mode, the text **S14** disappears and the value to be edited flashes.
Use key → to modify the digit's value.
Use key ≡ to skip digits.

To validate the value and exit edit mode, press the key ≡ > 3 s.

✓**Configuration values**

Table 31: Configuration values: Emission ratio.

Emission ratio	
Minimum value	0,000
Maximum value	2,000

Press the key → > 3 s to access the main screen of the **Efficie** menu.
Press the key → to navigate through the different configuration menus.

6.10.- DATA TIME

Note: *Menu visible on the* ***CEM-D211, CEM-D211-MID, CEM-D212, CEM-D212-MID, CEM-D311, CEM-D311-MID, CEM-D312*** *and* ***CEM-D312-MID*** *models.*

This menu is used to set the date and time on the device.

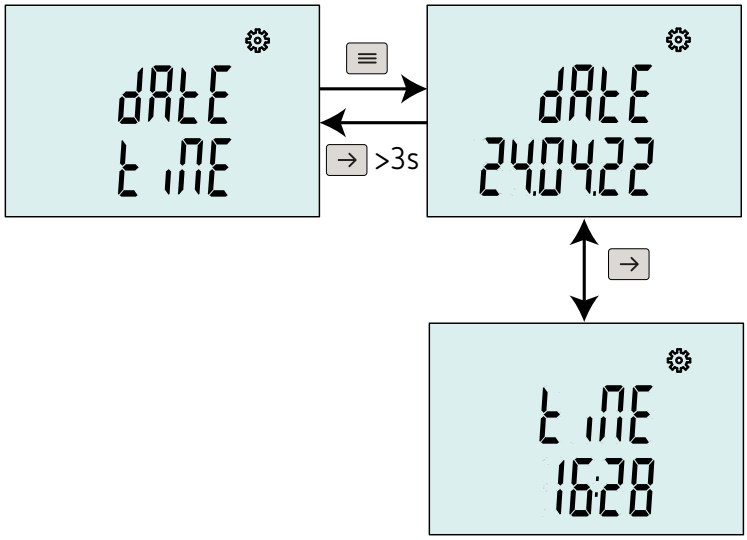

Figure 34: Time Menu.

6.10.1. - DATE

This menu is used to set the date on the device

Hold down the key ≡ to enter edit mode, the value to be edited flashes.
Use key → to modify the digit's value.
Use key ≡ to skip digits.

To validate the value and exit edit mode, press the key ≡ > 3 s.

Press the key → to skip to the next configuration parameter.

6.10.2. - TIME

This menu is used to set the time on the device.

Hold down the key ≡ to enter edit mode, the value to be edited flashes.
Use key → to modify the digit's value.
Use key ≡ to skip digits.

To validate the value and exit edit mode, press the key ≡ > 3 s.

Press the key → > 3 s to access the main screen of the **Data Time** menu.
Press the key → to navigate through the different configuration menus.

6.11.- DIGITAL INPUT 2

Note: *Menu visible on the* ***CEM-D211, CEM-D211-MID, CEM-D212, CEM-D212-MID, CEM-D311, CEM-D311-MID, CEM-D312*** *and* ***CEM-D312-MID*** *models.*

This menu is used to configure Digital Input 2.

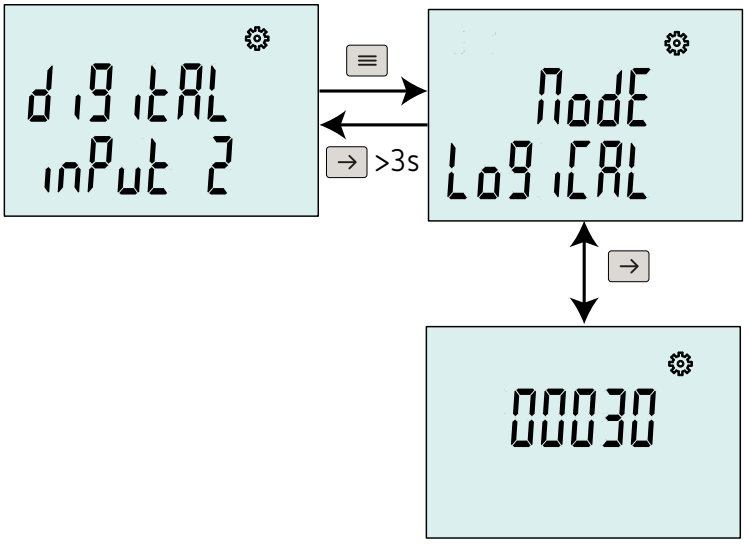

Figure 35: Digital Input 2 menu.

6.11.1. - MODE

This section is used to select the mode of operation of digital input 2.

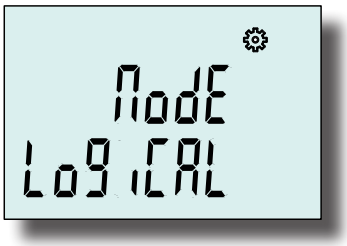

Hold down the key ≡ to enter edit mode, the value to be edited flashes.
Use key → to change options.

To validate the value and exit edit mode, press the key ≡ > 3 s.

✓**Configuration values**

Table 32: Configuration values: Mode.

	Mode
Possible values	**Logical**, Logical Input.
	Pulse, Pulse input.

Press the key → to skip to the next configuration parameter.

6.11.2. - PULSE WIDTH

In this section, the pulse width is selected in ms.

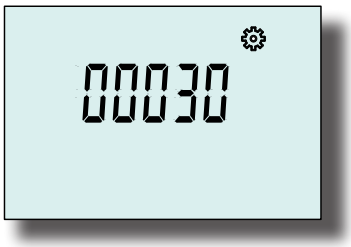

Hold down the key ≡ to enter edit mode, the value to be edited flashes.
Use key → to modify the digit's value.
Use key ≡ to skip digits.

To validate the value and exit edit mode, press the key ≡ > 3 s.

✓**Configuration values**

Table 33: Configuration values: Pulse width.

	Pulse width
Minimum value	10 ms
Maximum value	10000 ms

Press the key [→] > 3 s to access the main screen of the **Digital Input 2** menu.

Press the key [→] to navigate through the different configuration menus.

6.12.- AUTO UTC h

Note: *Menu visible on the **CEM-D211, CEM-D211-MID, CEM-D212, CEM-D212-MID, CEM-D311, CEM-D311-MID, CEM-D312** and **CEM-D312-MID** models.*

This section is used to select whether the RTC on the device is synchronized with UTC (Universal Time Coordinated).

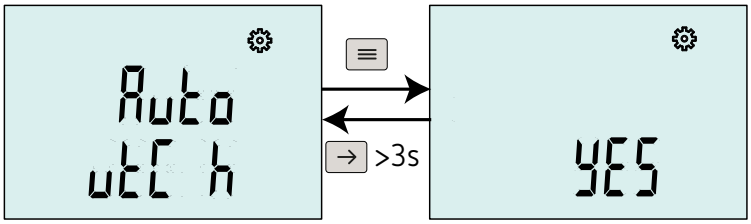

Figure 36: Menu Auto UTC h.

Hold down the key [≡] to enter edit mode, the value to be edited flashes.

Use key [→] to change options.

To validate the value and exit edit mode, press the key [≡] > 3 s.

✓**Configuration values**

Table 34: Configuration values: AUTO UTC h.

	AUTO UTC h
Possible values	YES, RTC synchronized with UTC.
	no, RTC not synchronized with UTC

Press the key [→] > 3 s to access the main screen of the **Auto UTC h** menu.

Press the key [→] to navigate through the different configuration menus.

6.13.- OUTPUT

Note: *Menu visible on the **CEM-D210, CEM-D210-MID, CEM-D310** and **CEM-D310-MID** models.*

This section is used to program the rate of the output pulses.

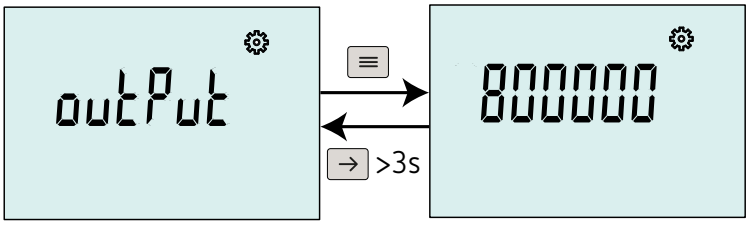

Figure 37: Output Menu.

Hold down the key ≡ to enter edit mode, the value to be edited flashes.
Use key → to modify the digit's value.
Use key ≡ to skip digits.

To validate the value and exit edit mode, press the key ≡ > 3 s.

✓Configuration values

Table 35: Configuration values: Output.

	Output
Minimum value	15 Wh [6]
Maximum value	99999 Wh [6]

[6]The high level of the output pulses is 200 ms.

Press the key → > 3 s to access the main screen of the **Output** menu.
Press the key → to navigate through the different configuration menus.

6.14.- PASSWORD

This section is used to set the password used to access the setup menu.

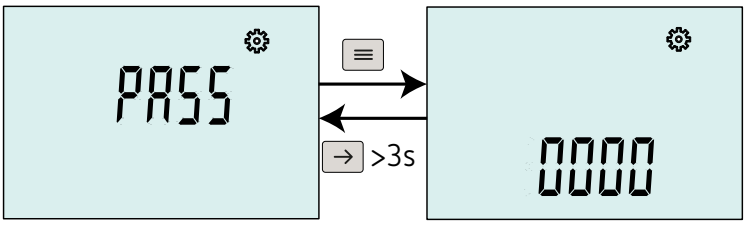

Figure 38: Password menu.

Hold down the key ≡ to enter edit mode, the value to be edited flashes.
Use key → to modify the digit's value.
Use key ≡ to skip digits.

To validate the value and exit edit mode, press the key ≡ > 3 s.

✓Configuration values

Table 36: Configuration values: Password.

	Password
Minimum value	0000
Maximum value	9999

Press the key → > 3 s to access the main screen of the **Password** menu.
Press the key → to navigate through the different configuration menus.

6.15.- LIGHT LCD

This section is used to program how long the display backlight will stay on after the last key is pressed on the device.

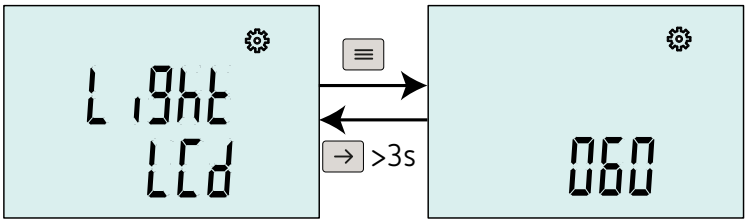

Figure 39: Light LCD menu.

Hold down the key ≡ to enter edit mode, the value to be edited flashes.

Use key → to modify the digit's value.

Use key ≡ to skip digits.

To validate the value and exit edit mode, press the key ≡ > 3 s.

✓**Configuration values**

Table 37: Configuration values: Light LCD.

	Light LCD
Minimum value	0 seconds
Maximum value	120 seconds

Note: *If 0 seconds are set, the backlight on the device is always on.*

Press the key → > 3 s to access the main screen of the **Light LCD** menu.

Press the key → to navigate through the different configuration menus.

7.- RS-485 COMMUNICATIONS

The **CEM-D211, CEM-D211-MID, CEM-D311, CEM-D311-MID** have an RS-485 communications port, with the **MODBUS RTU®** communications protocol.

7.1.- CONNECTIONS

The RS-485 cable must be wired using twisted pair cable with a mesh shield, with a maximum distance of 1200 meters between the device and the master unit.
A maximum of 32 devices can be connected to this bus.

For communications with the master unit, a smart RS-232 to RS-485 network protocol converter must be used.

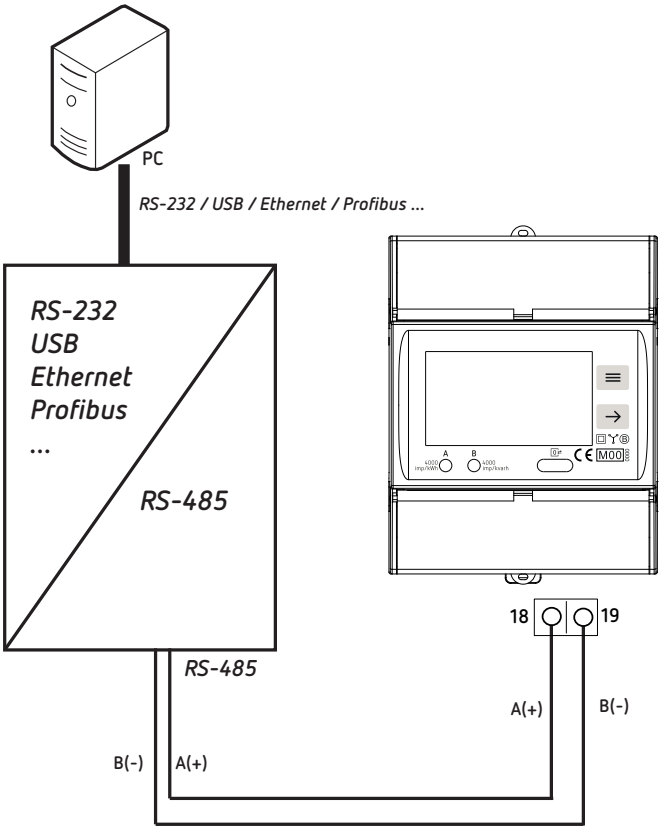

Figure 40: Connection diagram for the CEM-D211, CEM-D211-MID, CEM-D311 and CEM-D311-MID.

7.2.- MODBUS PROTOCOL

The **MODBUS** protocol is a standard communication protocol in the industry that is used to network multiple devices, with one master and multiple slaves. Within the **MODBUS** protocol, the **CEM-D21x/ CEM-D31x** uses RTU (Remote Terminal Unit) mode.

In RTU mode, message start and end are detected with a 3.5 minimum character silence and the 16-bit CRC error detection method is used.

The **MODBUS** functions implemented in the device are as follows:

Function 03 and 04: Register readout.
Function 10: Writing multiple registers.

7.2.1.- READ COMMAND

The **CEM-D21x/CEM-D31x** supports the integer read functions, Functions: 0x03 and 0x04.

Example: *Reading of the RS-485 transmission speed of the device with peripheral number 01.*

The following Modbus frame is sent:

Address	Function	Initial register	No. Register	CRC
01	04	13C	0002	CRC

The device will answer with the following frame:

Address	Function	No. bytes	Transmission speed	CRC
01	04	04	0000 0000	CRC

The transmission speed is 0000 0000: 9600 bps
Note: *The values are expressed in hexadecimal.*

7.2.2. - WRITE COMMAND

The device supports integer write functions, Function: 0x10.

Example: *Modify the RS-485 Baud rate of peripheral 01 to speed 19200.*

The following Modbus frame is sent:

Address	Function	Initial register	No. Register	Nº of bytes	Data	CRC
01	10	13C	0002	04	0000 0001	CRC

The device will answer with the following frame:

Address	Function	Initial register	No. Register	CRC
01	10	13C	0002	CRC

Note: *The values are expressed in hexadecimal.*

7.3. - MODBUS VARIABLES

All **MODBUS** map addresses are in Hexadecimal format.

7.3.1.- INSTANTANEOUS PARAMETERS

The **Read** function is implemented for these variables.

Table 38: Modbus variables: Instantaneous values (Table 1).

Description	Address	Size	Units
Voltage Phase-Neutral L1	0x0174, 0x0175	int32	V x 100
Voltage Phase-Neutral L2	0x0176, 0x0177	int32	V x 100
Voltage Phase-Neutral L3	0x0178, 0x0179	int32	V x 100
Voltage Phase-Phase L1-L2	0x017A, 0x017B	int32	V x 100
Voltage Phase-Phase L2-L3	0x017C, 0x017D	int32	V x 100
Voltage Phase-Phase L3-L1	0x017E, 0x017F	int32	V x 100
Average phase-neutral voltage	0x0180, 0x0181	int32	V x 100
Average phase-phase voltage	0x0182, 0x0183	int32	V x 100
Current L1 (7)	0x0184, 0x0185	int32	mA
Current L2 (7)	0x0186, 0x0187	int32	mA
Current L3 (7)	0x0188, 0x0189	int32	mA
Vector sum of the three-phase current	0x018A, 0x018B	int32	mA
Power factor L1 (7)	0x018C, 0x018D	int32	x 100
Power factor L2 (7)	0x018E, 0x018F	int32	x 100
Power factor L3 (7)	0x0190, 0x0191	int32	x 100
Power factor III	0x0192, 0x0193	int32	x 100
Active Power L1 (7)	0x0194, 0x0195	int32	W
Active Power L2 (7)	0x0196, 0x0197	int32	W
Active Power L3 (7)	0x0198, 0x0199	int32	W
Total Active Power	0x019A, 0x019B	int32	W
Reactive Power L1 (7)	0x019C, 0x019D	int32	var
Reactive Power L2 (7)	0x019E, 0x019F	int32	var
Reactive Power L3 (7)	0x01A0, 0x01A1	int32	var
Total Reactive Power	0x01A2, 0x01A3	int32	var
Apparent Power L1 (7)	0x01A4, 0x01A5	int32	VA
Apparent Power L2 (7)	0x01A6, 0x01A7	int32	VA
Apparent Power L3 (7)	0x01A8, 0x01A9	int32	VA
Total Apparent Power	0x01AA, 0x01AB	int32	VA
Frequency L1	0x01AC, 0x01AD	int32	Hz x 100
Frequency L2	0x01AE, 0x01AF	int32	Hz x 100
Frequency L3	0x01B0, 0x01B1	int32	Hz x 100

(7) Parameters not visible in the **CEM-D31x** models where installation type *3-3Ph* has been set, three-phase network measurement with 3-wire connection.

Table 39: Modbus variables: Instantaneous values (Table 2).

Description	Instantaneous	Maximum	Size	Units
Maximum Direct Active Power Demand L1 (8)	0x01B2, 0x01B3	0x01D4, 0x01D5	int32	W
Maximum Direct Active Power Demand L2 (8)	0x01B4, 0x01B5	0x01D6, 0x01D7	int32	W
Maximum Direct Active Power Demand L3 (8)	0x01B6, 0x01B7	0x01D8, 0x01D9	int32	W
Maximum Demand Combined Direct Active Power	0x01B8, 0x01B9	0x01DA, 0x01DB	int32	W
Maximum Reverse Active Power Demand L1 (8)	0x01BA, 0x01BB	0x01DC, 0x01DD	int32	W
Maximum Reverse Active Power Demand L2 (8)	0x01BC, 0x01BD	0x01DE, 0x01DF	int32	W
Maximum Reverse Active Power Demand L3 (8)	0x01BE, 0x01BF	0x01E0, 0x01E1	int32	W
Maximum Demand Combined Reverse Active Power	0x01C0, 0x01C1	0x01E2, 0x01E3	int32	W
Maximum Demand Combined Active Power	0x01C2, 0x01C3	0x01E4, 0x01E5	int32	W
Maximum Direct Reactive Power Demand L1 (8)	0x01C4, 0x01C5	0x01E6, 0x01E7	int32	var
Maximum Direct Reactive Power Demand L2 (8)	0x01C6, 0x01C7	0x01E8, 0x01E9	int32	var
Maximum Direct Reactive Power Demand L3 (8)	0x01C8, 0x01C9	0x01EA, 0x01EB	int32	var
Maximum Demand Combined Direct Reactive Power	0x01CA, 0x01CB	0x01EC, 0x01ED	int32	var
Maximum Reverse Reactive Power Demand L1 (8)	0x01CC, 0x01CD	0x01EE, 0x01EF	int32	var
Maximum Reverse Reactive Power Demand L2 (8)	0x01CE, 0x01CF	0x01F0, 0x01F1	int32	var
Maximum Reverse Reactive Power Demand L3 (8)	0x01D0, 0x01D1	0x01F2 0x01F3	int32	var
Maximum Demand Combined Reverse Reactive Power	0x01D2, 0x01D3	0x01F4, 0x041F5	int32	var
Maximum Demand Direct Apparent Power L1 (8)	0x01F6, 0x01F7	0x020E, 0x020F	int32	VA
Maximum Demand Direct Apparent Power L2 (8)	0x01F8, 0x01F9	0x0210, 0x0211	int32	VA
Maximum Demand Direct Apparent Power L3 (8)	0x01FA, 0x01FB	0x0212, 0x0213	int32	VA
Maximum Demand Combined Direct Apparent Power	0x01FC, 0x01FD	0x0214, 0x0215	int32	VA
Maximum Demand Reverse Apparent Power L1 (8)	0x01FE, 0x01FF	0x0216, 0x0217	int32	VA
Maximum Demand Reverse Apparent Power L2 (8)	0x0200, 0x0201	0x0218, 0x0219	int32	VA
Maximum Demand Reverse Apparent Power L3 (8)	0x0202, 0x0203	0x021A, 0x021B	int32	VA
Maximum Demand Combined Reverse Apparent Power	0x0204, 0x0205	0x021C, 0x021D	int32	VA
Maximum Demand Total Apparent Power L1 (8)	0x0206, 0x0207	0x021E, 0x021F	int32	VA
Maximum Demand Total Apparent Power L2 (8)	0x0208, 0x0209	0x0220, 0x0221	int32	VA
Maximum Demand Total Apparent Power L3 (8)	0x020A, 0x020B	0x0222, 0x0223	int32	VA
Maximum Demand Total Combined Apparent Power	0x020C, 0x020D	0x0224, 0x0225	int32	VA

(8) Parameters not visible in the **CEM-D31x** models where installation type *3-3Ph* has been set, three-phase network measurement with 3-wire connection.

7.3.2. - ENERGY PARAMETERS

The **Read** function is implemented for these variables.

Table 40: Modbus variables: Energy parameters (Table 1).

Description	Address	Size	Units
Total active energy imported	0x0000, 0x0001	int32	Wh x 1000
Total active energy exported	0x0002, 0x0003	int32	Wh x 1000
Total reactive energy quadrant 1	0x0004, 0x0005	int32	varh x 1000
Total reactive energy quadrant 2	0x0006, 0x0007	int32	varh x 1000
Total reactive energy quadrant 3	0x0008, 0x0009	int32	varh x 1000
Total reactive energy quadrant 4	0x000A, 0x000B	int32	varh x 1000
Partial imported active energy	0x000C, 0x000D	int32	Wh x 1000
Partial exported active energy	0x000E, 0x000F	int32	Wh x 1000

Table 40 (continued): Modbus variables: Energy parameters (Table 1).

Description	Address	Size	Units
Partial reactive energy quadrant 1	0x0010, 0x0011	int32	varh x 1000
Partial reactive energy quadrant 2	0x0012, 0x0013	int32	varh x 1000
Partial reactive energy quadrant 3	0x0014, 0x0015	int32	varh x 1000
Partial reactive energy quadrant 4	0x0016, 0x0017	int32	varh x 1000
Cost of Partial imported active energy	0x0018, 0x0019	int32	-
Carbon Emissions of Partial imported active energy	0x001A, 0x001B	int32	$kgCO_2$ x 1000
Partial operating hours	0x001C, 0x001D	int32	h x 1000
Total operating hours	0x001E, 0x001F	int32	h x 1000
Imported active energy Tariff 1 (RTC)	0x0020, 0x0021	int32	Wh x 1000
Exported active energy Tariff 1 (RTC)	0x0022, 0x0023	int32	Wh x 1000
Reactive Energy Tariff 1 (RTC) quadrant 1	0x0024, 0x0025	int32	varh x 1000
Reactive Energy Tariff 1 (RTC) quadrant 2	0x0026, 0x0027	int32	varh x 1000
Reactive Energy Tariff 1 (RTC) quadrant 3	0x0028, 0x0029	int32	varh x 1000
Reactive Energy Tariff 1 (RTC) quadrant 4	0x002A, 0x002B	int32	varh x 1000
Imported active energy Tariff 2 (RTC)	0x002C, 0x002D	int32	Wh x 1000
Exported active energy Tariff 2 (RTC)	0x002E, 0x002F	int32	Wh x 1000
Reactive Energy Tariff 2 (RTC) quadrant 1	0x0030, 0x0031	int32	varh x 1000
Reactive Energy Tariff 2 (RTC) quadrant 2	0x0032, 0x0033	int32	varh x 1000
Reactive Energy Tariff 2 (RTC) quadrant 3	0x0034, 0x0035	int32	varh x 1000
Reactive Energy Tariff 2 (RTC) quadrant 4	0x0036, 0x0037	int32	varh x 1000
Imported active energy Tariff 3 (RTC)	0x0038, 0x0039	int32	Wh x 1000
Exported active energy Tariff 3 (RTC)	0x003A, 0x003B	int32	Wh x 1000
Reactive Energy Tariff 3 (RTC) quadrant 1	0x003C, 0x003D	int32	varh x 1000
Reactive Energy Tariff 3 (RTC) quadrant 2	0x003E, 0x003F	int32	varh x 1000
Reactive Energy Tariff 3 (RTC) quadrant 3	0x0040, 0x0041	int32	varh x 1000
Reactive Energy Tariff 3 (RTC) quadrant 4	0x0042, 0x0043	int32	varh x 1000
Imported active energy Tariff 4 (RTC)	0x0044, 0x0045	int32	Wh x 1000
Exported active energy Tariff 4 (RTC)	0x0046, 0x0047	int32	Wh x 1000
Reactive Energy Tariff 4 (RTC) quadrant 1	0x0048, 0x0049	int32	varh x 1000
Reactive Energy Tariff 4 (RTC) quadrant 2	0x004A, 0x004B	int32	varh x 1000
Reactive Energy Tariff 4 (RTC) quadrant 3	0x004C, 0x004D	int32	varh x 1000
Reactive Energy Tariff 4 (RTC) quadrant 4	0x004E, 0x004F	int32	varh x 1000
Partial imported active energy Tariff 1 (RTC)	0x0050, 0x0051	int32	Wh x 1000
Partial exported active energy Tariff 1 (RTC)	0x0052, 0x0053	int32	Wh x 1000
Partial reactive energy Tariff 1 (RTC) quadrant 1	0x0054, 0x0055	int32	varh x 1000
Partial reactive energy Tariff 1 (RTC) quadrant 2	0x0056, 0x0057	int32	varh x 1000
Partial reactive energy Tariff 1 (RTC) quadrant 3	0x0058, 0x0059	int32	varh x 1000
Partial reactive energy Tariff 1 (RTC) quadrant 4	0x005A, 0x005B	int32	varh x 1000
Partial imported active energy Tariff 2 (RTC)	0x005C, 0x005D	int32	Wh x 1000
Partial exported active energy Tariff 2 (RTC)	0x005E, 0x005F	int32	Wh x 1000
Partial reactive energy Tariff 2 (RTC) quadrant 1	0x0060, 0x0061	int32	varh x 1000
Partial reactive energy Tariff 2 (RTC) quadrant 2	0x0062, 0x0063	int32	varh x 1000
Partial reactive energy Tariff 2 (RTC) quadrant 3	0x0064, 0x0065	int32	varh x 1000
Partial reactive energy Tariff 2 (RTC) quadrant 4	0x0066, 0x0067	int32	varh x 1000
Partial imported active energy Tariff 3 (RTC)	0x0068, 0x0069	int32	Wh x 1000

Table 40 (continued): Modbus variables: Energy parameters (Table 1).

Description	Address	Size	Units
Partial exported active energy Tariff 3 (RTC)	0x006A, 0x006B	int32	Wh x 1000
Partial reactive energy Tariff 3 (RTC) quadrant 1	0x006C, 0x006D	int32	varh x 1000
Partial reactive energy Tariff 3 (RTC) quadrant 2	0x006E, 0x006F	int32	varh x 1000
Partial reactive energy Tariff 3 (RTC) quadrant 3	0x0070, 0x0071	int32	varh x 1000
Partial reactive energy Tariff 3 (RTC) quadrant 4	0x0072, 0x0073	int32	varh x 1000
Partial imported active energy Tariff 4 (RTC)	0x0074, 0x0075	int32	Wh x 1000
Partial exported active energy Tariff 4 (RTC)	0x0076, 0x0077	int32	Wh x 1000
Partial reactive energy Tariff 4 (RTC) quadrant 1	0x0078, 0x0079	int32	varh x 1000
Partial reactive energy Tariff 4 (RTC) quadrant 2	0x007A, 0x007B	int32	varh x 1000
Partial reactive energy Tariff 4 (RTC) quadrant 3	0x007C, 0x007D	int32	varh x 1000
Partial reactive energy Tariff 4 (RTC) quadrant 4	0x007E, 0x007F	int32	varh x 1000
Operating hours of partial Active Energy Tariff 1 (RTC)	0x0080, 0x0081	int32	h x 1000
Cost of partial active energy Tariff 1 (RTC)	0x0082, 0x0083	int32	-
Carbon Emissions of Partial Active Energy Tariff 1 (RTC)	0x0084, 0x0085	int32	$kgCO_2$ x 1000
Operating hours of partial Active Energy Tariff 2 (RTC)	0x0086, 0x0087	int32	h x 1000
Cost of partial active energy Tariff 2 (RTC)	0x0088, 0x0089	int32	-
Carbon Emissions of Partial Active Energy Tariff 2 (RTC)	0x008A, 0x008B	int32	$kgCO_2$ x 1000
Operating hours of partial Active Energy Tariff 3 (RTC)	0x008C, 0x008D	int32	h x 1000
Cost of partial active energy Tariff 3 (RTC)	0x008E, 0x008F	int32	-
Carbon Emissions of Partial Active Energy Tariff 3 (RTC)	0x0090, 0x0091	int32	$kgCO_2$ x 1000
Operating hours of partial Active Energy Tariff 4 (RTC)	0x0092, 0x0093	int32	h x 1000
Cost of partial active energy Tariff 4 (RTC)	0x0094, 0x0095	int32	-
Carbon Emissions of Partial Active Energy Tariff 4 (RTC)	0x0096, 0x0097	int32	$kgCO_2$ x 1000
Total reactive energy imported	0x0098, 0x0099	int32	varh x 1000
Total reactive energy exported	0x009A, 0x009B	int32	varh x 1000
Direct Active Energy L1 (9)	0x009C, 0x009D	int32	Wh x 1000
Reverse Active Energy L1 (9)	0x009E, 0x009F	int32	Wh x 1000
Direct Reactive Energy L1 (9)	0x00A0, 0x00A1	int32	varh x 1000
Reverse Reactive Energy L1 (9)	0x00A2, 0x00A3	int32	varh x 1000
Total Reactive Energy L1 quadrant 1 (9)	0x00A4, 0x00A5	int32	varh x 1000
Total Reactive Energy L1 quadrant 2 (9)	0x00A6, 0x00A7	int32	varh x 1000
Total Reactive Energy L1 quadrant 3 (9)	0x00A8, 0x00A9	int32	varh x 1000
Total Reactive Energy L1 quadrant 4 (9)	0x00AA, 0x00AB	int32	varh x 1000
Direct Active Energy L2 (9)	0x00AC, 0x00AD	int32	Wh x 1000
Reverse Active Energy L2 (9)	0x00AE, 0x00AF	int32	Wh x 1000
Direct Reactive Energy L2 (9)	0x00B0, 0x00B1	int32	varh x 1000
Reverse Reactive Energy L2 (9)	0x00B2, 0x00B3	int32	varh x 1000
Total reactive energy L2 quadrant 1 (9)	0x00B4, 0x00B5	int32	varh x 1000
Total reactive energy L2 quadrant 2 (9)	0x00B6, 0x00B7	int32	varh x 1000
Total reactive energy L2 quadrant 3 (9)	0x00B8, 0x00B9	int32	varh x 1000
Total reactive energy L2 quadrant 4 (9)	0x00BA, 0x00BB	int32	varh x 1000
Direct Active Energy L3 (9)	0x00BC, 0x00BD	int32	Wh x 1000
Reverse Active Energy L3 (9)	0x00BE, 0x00BF	int32	Wh x 1000
Direct Reactive Energy L3 (9)	0x00C0, 0x00C1	int32	varh x 1000
Reverse Reactive Energy L3 (9)	0x00C2, 0x00C3	int32	varh x 1000

Table 40 (continued): Modbus variables: Energy parameters (Table 1).

Description	Address	Size	Units
Total reactive energy L3 quadrant 1 [9]	0x00C4, 0x00C5	int32	varh x 1000
Total reactive energy L3 quadrant 2 [9]	0x00C6, 0x00C7	int32	varh x 1000
Total reactive energy L3 quadrant 3 [9]	0x00C8, 0x00C9	int32	varh x 1000
Total reactive energy L3 quadrant 4 [9]	0x00CA, 0x00CB	int32	varh x 1000
Cost of total partial active energy	0x00CC, 0x00CD	int32	-
Carbon Emissions of Total Partial active energy	0x00CE, 0x00CF	int32	$kgCO_2$ x 1000
Imported active energy Tariff 1 (DS)	0x00D0, 0x00D1	int32	Wh x 1000
Exported active energy Tariff 1 (DS)	0x00D2, 0x00D3	int32	Wh x 1000
Reactive Energy Tariff 1 (DS) quadrant 1	0x00D4, 0x00D5	int32	varh x 1000
Reactive Energy Tariff 1 (DS) quadrant 2	0x00D6, 0x00D7	int32	varh x 1000
Reactive Energy Tariff 1 (DS) quadrant 3	0x00D8, 0x00D9	int32	varh x 1000
Reactive Energy Tariff 1 (DS) quadrant 4	0x00DA, 0x00DB	int32	varh x 1000
Imported active energy Tariff 2 (DS)	0x00DC, 0x00DD	int32	Wh x 1000
Exported active energy Tariff 2 (DS)	0x00DE, 0x00DF	int32	Wh x 1000
Reactive Energy Tariff 2 (DS) quadrant 1	0x00E0, 0x00E1	int32	varh x 1000
Reactive Energy Tariff 2 (DS) quadrant 2	0x00E2, 0x00E3	int32	varh x 1000
Reactive Energy Tariff 2 (DS) quadrant 3	0x00E4, 0x00E5	int32	varh x 1000
Reactive Energy Tariff 2 (DS) quadrant 4	0x00E6, 0x00E7	int32	varh x 1000
Partial imported active energy Tariff 1 (DS)	0x00E8, 0x00E9	int32	Wh x 1000
Partial exported active energy Tariff 1 (DS)	0x00EA, 0x00EB	int32	Wh x 1000
Partial reactive energy Tariff 1 (DS) quadrant 1	0x00EC, 0x00ED	int32	varh x 1000
Partial reactive energy Tariff 1 (DS) quadrant 2	0x00EE, 0x00EF	int32	varh x 1000
Partial reactive energy Tariff 1 (DS) quadrant 3	0x00F0, 0x00F1	int32	varh x 1000
Partial reactive energy Tariff 1 (DS) quadrant 4	0x00F2, 0x00F3	int32	varh x 1000
Partial imported active energy Tariff 2 (DS)	0x00F4, 0x00F5	int32	Wh x 1000
Partial exported active energy Tariff 2 (DS)	0x00F6, 0x00F7	int32	Wh x 1000
Partial reactive energy Tariff 2 (DS) quadrant 1	0x00F8, 0x00F9	int32	varh x 1000
Partial reactive energy Tariff 2 (DS) quadrant 2	0x00FA, 0x00FB	int32	varh x 1000
Partial reactive energy Tariff 2 (DS) quadrant 3	0x00FC, 0x00FD	int32	varh x 1000
Partial reactive energy Tariff 2 (DS) quadrant 4	0x00FE, 0x00FF	int32	varh x 1000
Partial operating hours Tariff 1 (DS)	0x0100, 0x0101	int32	h x 1000
Cost of partial active energy Tariff 1 (DS)	0x0102, 0x0103	int32	-
Carbon Emissions of Partial Active Energy Tariff 1 (DS)	0x0104, 0x0105	int32	$kgCO_2$ x 1000
Partial operating hours Tariff 2 (DS)	0x0106, 0x0107	int32	h x 1000
Cost of partial active energy Tariff 2 (DS)	0x0108, 0x0109	int32	-
Carbon Emissions of Partial Active Energy Tariff 2 (DS)	0x010A, 0x010B	int32	$kgCO_2$ x 1000

[9] Parameters not visible in the **CEM-D31x** models where installation type *3-3Ph* has been set, three-phase network measurement with 3-wire connection.

7.3.3. - OTHER PARAMETERS

The **Read** function is implemented for these variables.

Table 41:Other parameters (Table 1).

Description	Address	Value
Software Version	0x010E, 0x010F	-
Serial number	0x0110... 0x0113	-
Serial number ID	0x0114, 0x0115	**CEM-D211**: 600, **CEM-D311**: 601
CRC	0x0116, 0x0117	-

Table 42: Other parameters (Table 2).

Description	Address	Value
Digital input 2, status	0x0138	**0:** OFF **1:** ON
Digital Input 1, status	0x0139	**0:** Tariff 1 **1:**Tariff 2
Digital input 2, pulse counter value	0x015C	-

For these variables, the **Write** function is implemented.

Table 43: Other parameters (Table 3).

Description	Address	Value
Reset partial energy	0x0135	**1:** Partial energy Tariff 1 **2:** Partial energy Tariff 2 **3:** Partial energy Tariff 3 **4:** Partial energy Tariff 4 **5:** Partial active energy imported, Partial active energy exported, Partial reactive energy tariffs total quadrant 1, Partial reactive energy tariffs total quadrant 2, Partial reactive energy tariffs total quadrant 3, Partial reactive energy tariffs total quadrant 4, **6:** Partial energy all tariffs
Reset Cost of Partial Energy	0x0136	**1:** Cost of Tariff 1 **2:** Cost of Tariff 2 **3:** Cost of Tariff 3 **4:** Cost of Tariff 4 **5:** Partial cost **6:** Partial cost of all tariffs
Reset Carbon Emissions of Partial Energy	0x0137	**1:** Emissions Tariff 1 **2:** Emissions Tariff 2 **3:** Emissions Tariff 3 **4:** Emissions Tariff 4 **5:** Partial emissions **6:** Emissions all tariffs
Reset operating hours of partial Energy	0x0158 0x0159	**1:** Operating hours Tariff 1 **2:** Operating hours Tariff 2 **3:** Operating hours Tariff 3 **4:** Operating hours Tariff 4 **5:** Partial operating hours **6:** Operating hours all tariffs
Resetting Maximum Demand	0x015A 0x015B	**1:** Resetting Maximum Demand
Reset pulse counter	0x015D	**1:** Reset counter

7.3.4. - CONFIGURATION PARAMETERS

The **Read** and **Write** functions are implemented for these variables.

Table 44:Modbus configuration parameters (Table 1).

Description	Address	Size	Valid data range	Default value
Scroll	0x0154, 0x0155	32 bits	5 ... 99 s[10]	5 s
Display backlight	0x0134	16 bits	1... 120 s	60 s
Password	0x0150 0x0151	32 bits	0000... 9999	-
Device runtime	0x0152 0x0153	32 bits	dd:hh:mm	-

[10] If the value **0** is set, display scroll is disabled.

Table 45:Modbus configuration parameters (Table 2).

Description	Address	Size	Valid data range	Default value
Mode Code, measurement type	0x014C 0x014D	32 bits	**0:** 4Q, 4 quadrants **1:** 2Q, 2 quadrants	**0:** 4Q
Type Install	0x016B 0x016C	32 bits	**0:** 4-3Ph,Three-phase network measurement with 4-wire connection. **1:** 3-3Ph,Three-phase network measurement with 3-wire connection.	**0:** 4-3Ph
Tariff mode	0x0160	16 bits	**0:** RTC **1:** DS	**0:** RTC

Table 46:Modbus configuration parameters (Table 3).

Description	Address	Size	Valid data range	Default value
Current Primary	0x0142 0x0143	32 bits	1... 9999 A	5
Current sec, secondary current	0x0144 0x0145	32 bits	**0:** 5 A **1:** 1 A	**0:** 5 A

Table 47:Modbus configuration parameters (Table 4).

Description	Address	Size	Valid data range	Default value
Cost ratio for active energy	0x0118 0x0119	32 bits	0.... 99,999	00,001
Cost ratio for active energy Tariff 1 (DS)	0x011C 0x011D	32 bits	0.... 99,999	00,001
Cost ratio for active energy Tariff 2 (DS)	0x0120 0x0121	32 bits	0.... 99,999	00,001
Cost ratio for active energy Tariff 1 (RTC)	0x0124 0x0125	32 bits	0.... 99,999	00,001
Cost ratio for active energy Tariff 2 (RTC)	0x0128 0x0129	32 bits	0.... 99,999	00,001
Cost ratio for active energy Tariff 3 (RTC)	0x012C 0x012D	32 bits	0.... 99,999	00,001
Cost ratio for active energy Tariff 4 (RTC)	0x0130 0x0131	32 bits	0.... 99,999	00,001

Table 47 (Continued): Modbus configuration parameters (Table 4).

Description	Address	Size	Valid data range	Default value
Carbon Emissions of active energy	0x011A 0x011B	32 bits	0.... 99,999	00,001
Carbon Emissions of Active Energy Tariff 1 (DS)	0x011E 0x011F	32 bits	0.... 99,999	00,001
Carbon Emissions of Active Energy Tariff 2 (DS)	0x0122 0x0123	32 bits	0.... 99,999	00,001
Carbon Emissions of Active Energy Tariff 1 (RTC)	0x0126 0x0127	32 bits	0.... 99,999	00,001
Carbon Emissions of Active Energy Tariff 2 (RTC)	0x012A 0x012B	32 bits	0.... 99,999	00,001
Carbon Emissions of Active Energy Tariff 3 (RTC)	0x012E 0x012F	32 bits	0.... 99,999	00,001
Carbon Emissions of Active Energy Tariff 4 (RTC)	0x0132 0x0133	32 bits	0.... 99,999	00,001

Table 48:Modbus configuration parameters (Table 5).

Description	Address	Size	Valid data range	Default value
Demand, calculation method	0x014E 0x014F	32 bits	**0:** Fixed window **1:** Sliding window	**0**
Integration period	0x0148 0x0149	32 bits	1... 30 minutes	15 minutes

Table 49:Modbus configuration parameters (Table 6).

Description	Address	Size	Valid data range	Default value
Type of communications [11]	0x0169 0x016A	32 bits	**0:** RS-485 **1:** M-Bus	-
RS-485: Baud rate	0x013C 0x013D	32 bits	**0:** 9600, **1:**19200, **2:** 38400, **3:** 57600, **4:** 115200	**0:** 9600
M-Bus: Baud rate	0x013E 0x013F	32 bits	**0:** 9600, **1:**300, **2:** 600, **3:** 1200, **4:** 2400, **5:** 4800,	**0:** 9600
Address of peripheral	0x013A 0x013B	32 bits	1... 247	1
No. of data bits, parity, No. of stop bits	0x0140 0x0141	32 bits	**0: 8n1**, 8 data bits, no parity, 1 stop bit **1: 8n2**, 8 data bits, no parity, 2 stop bits **2: 8o1**, 8 data bits, odd parity, 1 stop bit **3: 8E1**, 8 data bits, even parity, 2 stop bits	**0**: 8n1

[11] Variable only in Read mode.

Table 50:Modbus configuration parameters (Table 7).

Description	Address	Size	Valid data range	Default value
Type of pulse output	0x0165 0x0166	32 bits	**0:** Active energy **1:** Reactive energy	**0**
Output, rate of output pulses	0x0167 0x0168	32 bits	0... 99999	1

Table 51:Modbus configuration parameters (Table 8).

Description	Address	Size	Valid data range	Default value
Digital input 2, Mode	0x0146 0x0147	32 bits	**0:** Logical input **1:** Pulse input	**0**
Digital input 2, pulse width	0x015E 0x015F	32 bits	10... 9999	30 ms

Table 52:Modbus configuration parameters (Table 9).

Description	Address	Size	Valid data range	Default value
Data time, date	0x0161 0x0162	32 bits	YY.MM.DD	-
Data time, time	0x0163 0x0164	32 bits	hh:mm	-
Days (hours.minutes)	0x014A 0x014B	32 bits	dd:hh:mm	-

7.3.5. - TARIFFS

For these variables the **Read: 0x01** and **Write: 0x16** functions are implemented.

Table 53:Modbus variables: tariffs (Table 1).

Description	Address	Size	Valid data range
Work day: hour, minutes	0x022E	16 bits	**hh** (0...23), **mm**(0...59)
Work day: Tariff	0x022F	16 bits	1... 4
Work day: hour, minutes	0x0230	16 bits	**hh** (0...23), **mm**(0...59)
Work day: Tariff	0x0231	16 bits	1... 4
Work day: hour, minutes	0x0232	16 bits	**hh** (0...23), **mm**(0...59)
Work day: Tariff	0x0233	16 bits	1... 4
Work day: hour, minutes	0x0234	16 bits	**hh** (0...23), **mm**(0...59)
Work day: Tariff	0x0235	16 bits	1... 4
Work day: hour, minutes	0x0236	16 bits	**hh** (0...23), **mm**(0...59)
Work day: Tariff	0x0237	16 bits	1... 4
Work day: hour, minutes	0x0238	16 bits	**hh** (0...23), **mm**(0...59)
Work day: Tariff	0x0239	16 bits	1... 4
Work day: hour, minutes	0x023A	16 bits	**hh** (0...23), **mm**(0...59)
Work day: Tariff	0x023B	16 bits	1... 4
Work day: hour, minutes	0x023C	16 bits	**hh** (0...23), **mm**(0...59)
Work day: Tariff	0x023D	16 bits	1... 4
Day off: hour, minutes	0x023E	16 bits	**hh** (0...23), **mm**(0...59)
Day off: Tariff	0x023F	16 bits	1... 4
Day off: hour, minutes	0x0240	16 bits	**hh** (0...23), **mm**(0...59)
Day off: Tariff	0x0241	16 bits	1... 4
Day off: hour, minutes	0x0242	16 bits	**hh** (0...23), **mm**(0...59)
Day off: Tariff	0x0243	16 bits	1... 4
Day off: hour, minutes	0x0244	16 bits	**hh** (0...23), **mm**(0...59)
Day off: Tariff	0x0245	16 bits	1... 4

Table 53 (Continued): Modbus variables: tariffs (Table 1).

Description	Address	Size	Valid data range
Day off: hour, minutes	0x0246	16 bits	**hh** (0...23), **mm**(0...59)
Day off: Tariff	0x0247	16 bits	1... 4
Day off: hour, minutes	0x0248	16 bits	**hh** (0...23), **mm**(0...59)
Day off: Tariff	0x0249	16 bits	1... 4
Day off: hour, minutes	0x024A	16 bits	**hh** (0...23), **mm**(0...59)
Day off: Tariff	0x024B	16 bits	1... 4
Day off: hour, minutes	0x024C	16 bits	**hh** (0...23), **mm**(0...59)
Day off: Tariff	0x024D	16 bits	1... 4
Weekend: hour, minutes	0x024E	16 bits	**hh** (0...23), **mm**(0...59)
Weekend: Tariff	0x024F	16 bits	1... 4
Weekend: hour, minutes	0x0250	16 bits	**hh** (0...23), **mm**(0...59)
Weekend: Tariff	0x0251	16 bits	1... 4
Weekend: hour, minutes	0x0252	16 bits	**hh** (0...23), **mm**(0...59)
Weekend: Tariff	0x0253	16 bits	1... 4
Weekend: hour, minutes	0x0254	16 bits	**hh** (0...23), **mm**(0...59)
Weekend: Tariff	0x0255	16 bits	1... 4
Weekend: hour, minutes	0x0256	16 bits	**hh** (0...23), **mm**(0...59)
Weekend: Tariff	0x0257	16 bits	1... 4
Weekend: hour, minutes	0x0258	16 bits	**hh** (0...23), **mm**(0...59)
Weekend: Tariff	0x0259	16 bits	1... 4
Weekend: hour, minutes	0x025A	16 bits	**hh** (0...23), **mm**(0...59)
Weekend: Tariff	0x025B	16 bits	1... 4
Weekend: hour, minutes	0x025C	16 bits	**hh** (0...23), **mm**(0...59)
Weekend: Tariff	0x025D	16 bits	1... 4
Bank holidays [12]	0x025E	16 bits	**MM**(0x01..0x0C)**DD**(0x01 ...1F)

[12] The device has 100 slots available to store bank holidays.

8.- M-BUS COMMUNICATIONS

The **CEM-D212, CEM-D212-MID, CEM-D312, CEM-D312-MID** have an M-BUS communications port.

8.1. - CONNECTIONS

The connection diagram for the M-BUS communications is shown in **Figure 41**.

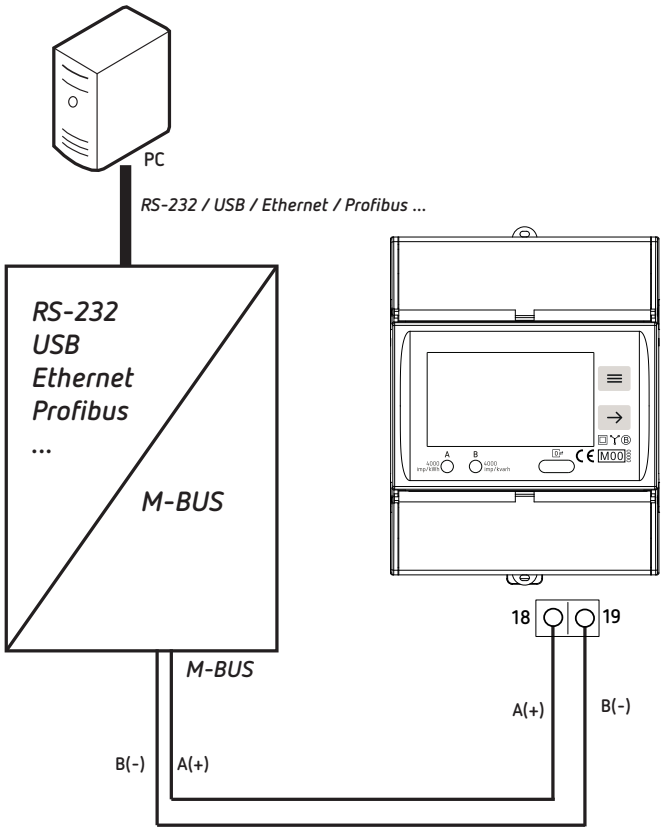

Figure 41: Connection diagram CEM-D212, CEM-D212-MID, CEM-D312 y CEM-D312-MID.

8.2. - M-BUS PROTOCOL

M-BUS communications implement an M-Bus slave interface that is compatible with the **UNE-EN 13757-2** and **UNE-EN 13757-3** standards, which allows reading the electrical parameters of the device directly.

Table 54 shows the M-BUS parameters of the device.

Table 54: M-BUS Variables.

ID	Description	Format	Units
1	Total active energy imported	32 bits Integer	Wh
2	Total active energy exported	32 bits Integer	Wh
3	Total reactive energy quadrant 1	32 bits Integer	varh
4	Total reactive energy quadrant 2	32 bits Integer	varh

Table 54 (Continued): M-BUS Variables.

ID	Description	Format	Units
5	Total reactive energy quadrant 3	32 bits Integer	varh
6	Total reactive energy quadrant 4	32 bits Integer	varh
7	Partial imported active energy	32 bits Integer	Wh
8	Partial exported active energy	32 bits Integer	Wh
9	Partial reactive energy quadrant 1	32 bits Integer	varh
10	Partial reactive energy quadrant 2	32 bits Integer	varh
11	Partial reactive energy quadrant 3	32 bits Integer	varh
12	Partial reactive energy quadrant 4	32 bits Integer	varh
13	Cost of Partial imported active energy	32 bits	-
14	Carbon Emissions of Partial imported active energy	32 bits	$kgCO_2$
15	Partial operating hours	32 bits	h
16	Total operating hours	32 bits	h
17	Imported active energy Tariff 1 (RTC)	32 bits Integer	Wh
18	Exported active energy Tariff 1 (RTC)	32 bits Integer	Wh
19	Reactive Energy Tariff 1 (RTC) quadrant 1	32 bits Integer	varh
20	Reactive Energy Tariff 1 (RTC) quadrant 2	32 bits Integer	varh
21	Reactive Energy Tariff 1 (RTC) quadrant 3	32 bits Integer	varh
22	Reactive Energy Tariff 1 (RTC) quadrant 4	32 bits Integer	varh
23	Imported active energy Tariff 2 (RTC)	32 bits Integer	Wh
24	Exported active energy Tariff 2 (RTC)	32 bits Integer	Wh
25	Reactive Energy Tariff 2 (RTC) quadrant 1	32 bits Integer	varh
26	Reactive Energy Tariff 2 (RTC) quadrant 2	32 bits Integer	varh
27	Reactive Energy Tariff 2 (RTC) quadrant 3	32 bits Integer	varh
28	Reactive Energy Tariff 2 (RTC) quadrant 4	32 bits Integer	varh
29	Imported active energy Tariff 3 (RTC)	32 bits Integer	Wh
30	Exported active energy Tariff 3 (RTC)	32 bits Integer	Wh
31	Reactive Energy Tariff 3 (RTC) quadrant 1	32 bits Integer	varh
32	Reactive Energy Tariff 3 (RTC) quadrant 2	32 bits Integer	varh
33	Reactive Energy Tariff 3 (RTC) quadrant 3	32 bits Integer	varh
34	Reactive Energy Tariff 3 (RTC) quadrant 4	32 bits Integer	varh
35	Imported active energy Tariff 4 (RTC)	32 bits Integer	Wh
36	Exported active energy Tariff 4 (RTC)	32 bits Integer	Wh
37	Reactive Energy Tariff 4 (RTC) quadrant 1	32 bits Integer	varh
38	Reactive Energy Tariff 4 (RTC) quadrant 2	32 bits Integer	varh
39	Reactive Energy Tariff 4 (RTC) quadrant 3	32 bits Integer	varh
40	Reactive Energy Tariff 4 (RTC) quadrant 4	32 bits Integer	varh
41	Partial imported active energy Tariff 1 (RTC)	32 bits Integer	Wh
42	Partial exported active energy Tariff 1 (RTC)	32 bits Integer	Wh
43	Partial reactive energy Tariff 1 (RTC) quadrant 1	32 bits Integer	varh
44	Partial reactive energy Tariff 1 (RTC) quadrant 2	32 bits Integer	varh
45	Partial reactive energy Tariff 1 (RTC) quadrant 3	32 bits Integer	varh
46	Partial reactive energy Tariff 1 (RTC) quadrant 4	32 bits Integer	varh
47	Partial imported active energy Tariff 2 (RTC)	32 bits Integer	Wh
48	Partial exported active energy Tariff 2 (RTC)	32 bits Integer	Wh

Table 54 (Continued): M-BUS Variables.

ID	Description	Format	Units
49	Partial reactive energy Tariff 2 (RTC) quadrant 1	32 bits Integer	varh
50	Partial reactive energy Tariff 2 (RTC) quadrant 2	32 bits Integer	varh
51	Partial reactive energy Tariff 2 (RTC) quadrant 3	32 bits Integer	varh
52	Partial reactive energy Tariff 2 (RTC) quadrant 4	32 bits Integer	varh
53	Partial imported active energy Tariff 3 (RTC)	32 bits Integer	Wh
54	Partial exported active energy Tariff 3 (RTC)	32 bits Integer	Wh
55	Partial reactive energy Tariff 3 (RTC) quadrant 1	32 bits Integer	varh
56	Partial reactive energy Tariff 3 (RTC) quadrant 2	32 bits Integer	varh
57	Partial reactive energy Tariff 3 (RTC) quadrant 3	32 bits Integer	varh
58	Partial reactive energy Tariff 3 (RTC) quadrant 4	32 bits Integer	varh
59	Partial imported active energy Tariff 4 (RTC)	32 bits Integer	Wh
60	Partial exported active energy Tariff 4 (RTC)	32 bits Integer	Wh
61	Partial reactive energy Tariff 4 (RTC) quadrant 1	32 bits Integer	varh
62	Partial reactive energy Tariff 4 (RTC) quadrant 2	32 bits Integer	varh
63	Partial reactive energy Tariff 4 (RTC) quadrant 3	32 bits Integer	varh
64	Partial reactive energy Tariff 4 (RTC) quadrant 4	32 bits Integer	varh
65	Operating hours of partial Active Energy Tariff 1 (RTC)	32 bits	h
66	Cost of partial active energy Tariff 1 (RTC)	32 bits	-
67	Carbon Emissions of Partial Active Energy Tariff 1 (RTC)	32 bits	$kgCO_2$
68	Operating hours of partial Active Energy Tariff 2 (RTC)	32 bits	h
69	Cost of partial active energy Tariff 2 (RTC)	32 bits	-
70	Carbon Emissions of Partial Active Energy Tariff 2 (RTC)	32 bits	$kgCO_2$
71	Operating hours of partial Active Energy Tariff 3 (RTC)	32 bits	h
72	Cost of partial active energy Tariff 3 (RTC)	32 bits	-
73	Carbon Emissions of Partial Active Energy Tariff 3 (RTC)	32 bits	$kgCO_2$
74	Operating hours of partial Active Energy Tariff 4 (RTC)	32 bits	h
75	Cost of partial active energy Tariff 4 (RTC)	32 bits	-
76	Carbon Emissions of Partial Active Energy Tariff 4 (RTC)	32 bits	$kgCO_2$
77	Total reactive energy imported	32 bits Integer	varh
78	Total reactive energy exported	32 bits Integer	varh
79	Direct Active Energy L1 (13)	32 bits Integer	Wh
80	Reverse Active Energy L1 (13)	32 bits Integer	Wh
81	Direct Reactive Energy L1 (13)	32 bits Integer	varh
82	Reverse Reactive Energy L1 (13)	32 bits Integer	varh
83	Total Reactive Energy L1 quadrant 1 (13)	32 bits Integer	varh
84	Total Reactive Energy L1 quadrant 2 (13)	32 bits Integer	varh
85	Total Reactive Energy L1 quadrant 3 (13)	32 bits Integer	varh
86	Total Reactive Energy L1 quadrant 4 (13)	32 bits Integer	varh
87	Direct Active Energy L2 (13)	32 bits Integer	Wh
88	Reverse Active Energy L2 (13)	32 bits Integer	Wh
89	Direct Reactive Energy L2 (13)	32 bits Integer	varh
90	Reverse Reactive Energy L2 (13)	32 bits Integer	varh
91	Total reactive energy L2 quadrant 1 (13)	32 bits Integer	varh
92	Total reactive energy L2 quadrant 2 (13)	32 bits Integer	varh

Table 54 (Continued): M-BUS Variables.

ID	Description	Format	Units
93	Total reactive energy L2 quadrant 3 (13)	32 bits Integer	varh
94	Total reactive energy L2 quadrant 4 (13)	32 bits Integer	varh
95	Direct Active Energy L3 (13)	32 bits Integer	Wh
96	Reverse Active Energy L3 (13)	32 bits Integer	Wh
97	Direct Reactive Energy L3 (13)	32 bits Integer	varh
98	Reverse Reactive Energy L3 (13)	32 bits Integer	varh
99	Total reactive energy L3 quadrant 1 (13)	32 bits Integer	varh
100	Total reactive energy L3 quadrant 2 (13)	32 bits Integer	varh
101	Total reactive energy L3 quadrant 3 (13)	32 bits Integer	varh
102	Total reactive energy L3 quadrant 4 (13)	32 bits Integer	varh
103	Cost of total partial active energy	32 bits	-
104	Carbon Emissions of Total Partial active energy	32 bits	$kgCO_2$
105	Imported active energy Tariff 1 (DS)	32 bits Integer	Wh
106	Exported active energy Tariff 1 (DS)	32 bits Integer	Wh
107	Reactive Energy Tariff 1 (DS) quadrant 1	32 bits Integer	varh
108	Reactive Energy Tariff 1 (DS) quadrant 2	32 bits Integer	varh
109	Reactive Energy Tariff 1 (DS) quadrant 3	32 bits Integer	varh
110	Reactive Energy Tariff 1 (DS) quadrant 4	32 bits Integer	varh
111	Imported active energy Tariff 2 (DS)	32 bits Integer	Wh
112	Exported active energy Tariff 2 (DS)	32 bits Integer	Wh
113	Reactive Energy Tariff 2 (DS) quadrant 1	32 bits Integer	varh
114	Reactive Energy Tariff 2 (DS) quadrant 2	32 bits Integer	varh
115	Reactive Energy Tariff 2 (DS) quadrant 3	32 bits Integer	varh
116	Reactive Energy Tariff 2 (DS) quadrant 4	32 bits Integer	varh
117	Partial imported active energy Tariff 1 (DS)	32 bits Integer	Wh
118	Partial exported active energy Tariff 1 (DS)	32 bits Integer	Wh
119	Partial reactive energy Tariff 1 (DS) quadrant 1	32 bits Integer	varh
120	Partial reactive energy Tariff 1 (DS) quadrant 2	32 bits Integer	varh
121	Partial reactive energy Tariff 1 (DS) quadrant 3	32 bits Integer	varh
122	Partial reactive energy Tariff 1 (DS) quadrant 4	32 bits Integer	varh
123	Partial imported active energy Tariff 2 (DS)	32 bits Integer	Wh
124	Partial exported active energy Tariff 2 (DS)	32 bits Integer	Wh
125	Partial reactive energy Tariff 2 (DS) quadrant 1	32 bits Integer	varh
126	Partial reactive energy Tariff 2 (DS) quadrant 2	32 bits Integer	varh
127	Partial reactive energy Tariff 2 (DS) quadrant 3	32 bits Integer	varh
128	Partial reactive energy Tariff 2 (DS) quadrant 4	32 bits Integer	varh
129	Partial operating hours Tariff 1 (DS)	32 bits	h
130	Cost of partial active energy Tariff 1 (DS)	32 bits	-
131	Carbon Emissions of Partial Active Energy Tariff 1 (DS)	32 bits	$kgCO_2$
132	Partial operating hours Tariff 2 (DS)	32 bits	h
133	Cost of partial active energy Tariff 2 (DS)	32 bits	-
134	Carbon Emissions of Partial Active Energy Tariff 2 (DS)	32 bits	$kgCO_2$
135	Voltage Phase-Neutral L1	32 bits Integer	V
136	Voltage Phase-Neutral L2	32 bits Integer	V

Table 54 (Continued): M-BUS Variables.

ID	Description	Format	Units
137	Tensión Fase Neutro L3	32 bits Integer	V
138	Voltage Phase-Neutral L3	32 bits Integer	V
139	Voltage Phase-Phase L1-L2	32 bits Integer	V
140	Voltage Phase-Phase L2-L3	32 bits Integer	V
141	Voltage Phase-Phase L3-L1	32 bits Integer	V
142	Average phase-neutral voltage	32 bits Integer	V
143	Current L1 (13)	32 bits Integer	A
144	Current L2 (13)	32 bits Integer	A
145	Current L3 (13)	32 bits Integer	A
146	Vector sum of the three-phase current	32 bits Integer	A
147	Power factor L1 (13)	32 bits Integer	-
148	Power factor L2 (13)	32 bits Integer	-
149	Power factor L3 (13)	32 bits Integer	-
150	Power factor III	32 bits Integer	-
151	Active Power L1 (13)	32 bits Integer	W
152	Active Power L2 (13)	32 bits Integer	W
153	Active Power L3 (13)	32 bits Integer	W
154	Total Active Power	32 bits Integer	W
155	Reactive Power L1 (13)	32 bits Integer	var
156	Reactive Power L2 (13)	32 bits Integer	var
157	Reactive Power L3 (13)	32 bits Integer	var
158	Total Reactive Power	32 bits Integer	var
159	Apparent Power L1 (13)	32 bits Integer	VA
160	Apparent Power L2 (13)	32 bits Integer	VA
161	Apparent Power L3 (13)	32 bits Integer	VA
162	Total Apparent Power	32 bits Integer	VA
163	Frequency L1	32 bits Integer	Hz
164	Frequency L2	32 bits Integer	Hz
165	Frequency L3	32 bits Integer	Hz
166	Maximum Direct Active Power Demand L1 (13)	32 bits Integer	W
167	Maximum Direct Active Power Demand L2 (13)	32 bits Integer	W
168	Maximum Direct Active Power Demand L3 (13)	32 bits Integer	W
169	Maximum Demand Combined Direct Active Power	32 bits Integer	W
170	Maximum Reverse Active Power Demand L1 (13)	32 bits Integer	W
171	Maximum Reverse Active Power Demand L2 (13)	32 bits Integer	W
172	Maximum Reverse Active Power Demand L3 (13)	32 bits Integer	W
173	Maximum Demand Combined Reverse Active Power	32 bits Integer	W
174	Maximum Demand Combined Active Power	32 bits Integer	W
175	Maximum Direct Reactive Power Demand L1 (13)	32 bits Integer	var
176	Maximum Direct Reactive Power Demand L2 (13)	32 bits Integer	var
177	Maximum Direct Reactive Power Demand L3 (13)	32 bits Integer	var
178	Maximum Demand Combined Direct Reactive Power	32 bits Integer	var
179	Maximum Reverse Reactive Power Demand L1 (13)	32 bits Integer	var
180	Maximum Reverse Reactive Power Demand L2 (13)	32 bits Integer	var

Table 54 (Continued): M-BUS Variables.

ID	Description	Format	Units
181	Maximum Reverse Reactive Power Demand L3 (13)	32 bits Integer	var
182	Maximum Demand Combined Reverse Reactive Power	32 bits Integer	var
183	Maximum value: Maximum Direct Active Power Demand L1 (13)	32 bits Integer	W
184	Maximum value: Maximum Direct Active Power Demand L2 (13)	32 bits Integer	W
185	Maximum value: Maximum Direct Active Power Demand L3 (13)	32 bits Integer	W
186	Maximum value: Maximum Demand Combined Direct Active Power	32 bits Integer	W
187	Maximum value: Maximum Reverse Active Power Demand L1 (13)	32 bits Integer	W
188	Maximum value: Maximum Reverse Active Power Demand L2 (13)	32 bits Integer	W
189	Maximum value: Maximum Reverse Active Power Demand L3 (13)	32 bits Integer	W
190	Maximum value: Maximum Demand Combined Reverse Active Power	32 bits Integer	W
191	Maximum value: Maximum Demand Combined Active Power	32 bits Integer	W
192	Maximum value: Maximum Direct Reactive Power Demand L1 (13)	32 bits Integer	var
193	Maximum value: Maximum Direct Reactive Power Demand L2 (13)	32 bits Integer	var
194	Maximum value: Maximum Direct Reactive Power Demand L3 (13)	32 bits Integer	var
195	Maximum value: Maximum Demand Combined Direct Reactive Power	32 bits Integer	var
196	Maximum value: Maximum Reverse Reactive Power Demand L1 (13)	32 bits Integer	var
197	Maximum value: Maximum Reverse Reactive Power Demand L2 (13)	32 bits Integer	var
198	Maximum value: Maximum Reverse Reactive Power Demand L3 (13)	32 bits Integer	var
199	Maximum value: Maximum Demand Combined Reverse Reactive Power	32 bits Integer	var
200	Maximum Demand Direct Apparent Power L1 (13)	32 bits Integer	VA
201	Maximum Demand Direct Apparent Power L2 (13)	32 bits Integer	VA
202	Maximum Demand Direct Apparent Power L3 (13)	32 bits Integer	VA
203	Maximum Demand Combined Direct Apparent Power	32 bits Integer	VA
204	Maximum Demand Reverse Apparent Power L1 (13)	32 bits Integer	VA
205	Maximum Demand Reverse Apparent Power L2 (13)	32 bits Integer	VA
206	Maximum Demand Reverse Apparent Power L3 (13)	32 bits Integer	VA
207	Maximum Demand Combined Reverse Apparent Power	32 bits Integer	VA
208	Maximum Demand Total Apparent Power L1 (13)	32 bits Integer	VA
209	Maximum Demand Total Apparent Power L2 (13)	32 bits Integer	VA
210	Maximum Demand Total Apparent Power L3 (13)	32 bits Integer	VA
211	Maximum Demand Total Combined Apparent Power	32 bits Integer	VA
212	Maximum value: Maximum Demand Direct Apparent Power L1 (13)	32 bits Integer	VA
213	Maximum value: Maximum Demand Direct Apparent Power L2 (13)	32 bits Integer	VA
214	Maximum value: Maximum Demand Direct Apparent Power L3 (13)	32 bits Integer	VA
215	Maximum value: Maximum Demand Combined Direct Apparent Power	32 bits Integer	VA
216	Maximum value: Maximum Demand Reverse Apparent Power L1 (13)	32 bits Integer	VA
217	Maximum value: Maximum Demand Reverse Apparent Power L2 (13)	32 bits Integer	VA
218	Maximum value: Maximum Demand Reverse Apparent Power L3 (13)	32 bits Integer	VA
219	Maximum value: Maximum Demand Combined Reverse Apparent Power	32 bits Integer	VA
220	Maximum value: Maximum Demand Total Apparent Power L1 (13)	32 bits Integer	VA
221	Maximum value: Maximum Demand Total Apparent Power L2 (13)	32 bits Integer	VA
222	Maximum value: Maximum Demand Total Apparent Power L3 (13)	32 bits Integer	VA
223	Maximum value: Maximum Demand Total Combined Apparent Power	32 bits Integer	VA
224	Software Version	32 bits	-

Table 54 (Continued): M-BUS Variables.

ID	Description	Format	Units
225	Serial number	-	-
226	Serial number ID	-	-
227	CRC	16 bits	-
228	Configuration: Cost ratio for active energy	-	-
229	Configuration: Carbon Emissions of active energy	-	-
230	Display backlight	16 bits	-
231	Digital input 2, status	8 bits	-
232	Digital Input 1, status	8 bits	-
233	Configuration: Communications	8 bits	-
234	Configuration: Current primary	16 bits	-
235	Configuration: Current sec	8 bits	-
236	Configuration: Digital input 2, Mode	8 bits	-
237	demand cycle	8 bits	-
238	Time (hour.minutes 99999.99)	32 bits	-
239	combined code	8 bits	-
240	demand mode	8 bits	-
241	LCD button display password setting	8 bits	-
242	Meter running time	32 bits	-
243	Scroll (0 or 5-99 s)	8 bits	-
244	Set the timing current value	32 bits	-
245	Count pulse Digital input 2	16 bits	-
246	pulse width Digital input 2	32 bits	-
247	Configuration: Tariff mode	8 bits	-
248	Date (YY.MM.DD)	AAMMDDHHMM	-
249	Type communication	8 bits	-
250	Type Install	8 bits	-

(13) Parameters not visible in the **CEM-D31x** models where installation type *3-3Ph* has been set, three-phase network measurement with 3-wire connection.

9.- TECHNICAL SPECIFICATIONS

Power Supply	
Mode	Self-powered
Consumption	< 0.5 W, < 2 VA
Installation category	CAT III 300V

Voltage measurement	
Connection	Three-phase
Reference voltages	3 x 127/220 ... 230/400 V ~ ± 20%
Frequency	50 / 60 Hz
Consumption	< 2 VA

Current measurement circuit (CEM-D21x, CEM-D21x-MID)	
Current (Ib/Iref)	5 A
Maximum current (Imax)	100 A
Starting current	0.04 Itr
Itr	0.500 A
Ist	0.020 A
Imin	0.250 A
Maximum overcurrent time (30xImax) (acording to EN-50470-3)	½ cycle
Consumption	< 1 VA

Current measurement circuit (CEM-D31x, CEM-D31x-MID)			
	CEM-D31x		CEM-D31x-MID
Scales	.../1A	.../5A	.../5A
Current (Ib/Iref)	1 A	5 A	5 A
Maximum current (Imax)	6 A	10 A	10 A
Starting current	0.04 Itr		0.04 Itr
Itr	0.500 A		0.25 A
Ist	0.020 A		0.01 A
Imin	0.02 A	0.1 A	0.05 A
Maximum overcurrent time (30xImax) (acording to EN-50470-3)	½ cycle		
Consumption	< 1 VA		

Measurement accuracy		
Active Energy	CEM-D21x CEM-D31x	CEM-D21x-MID CEM-D31x-MID
	Class 1 (IEC 62053-21)	Class B (UNE-EN-50470)
Reactive Energy	Class 2 (IEC 62053-23)	

Insulation	
AC voltage	4 kV
Impulse voltage	6 kV

Pulse output (CEM-D210, CEM-D310, CEM-D210-MID, CEM-D310-MID)	
Type	Optocoupler
Operational	Pulse emission proportional to energy
Maximum voltage	≤ 27 V ⎓

(Continued) Pulse output (CEM-D210, CEM-D310, CEM-D210-MID, CEM-D310-MID)		
Maximum current	≤ 27 mA	
Pulse ON/OFF time	CEM-D210 CEM-D310	CEM-D210-MID CEM-D310-MID
	ON: 200 ms / **OFF:** 113.02 ms	**ON:** 40 ms / **OFF:** 64.34 ms
Maximum no. of pulses per second	3	12

Digital input (CEM-D211, CEM-D212, CEM-D311, CEM-D312, CEM-D211-MID, CEM-D212-MID, CEM-D311-MID, CEM-D312-MID)	
Quantity	2
Type	Potential-free contact
Insulation	4 kV
Maximum short-circuit current	8.47 mA
Maximum open circuit voltage	5 V ⎓

RS-485 communications (CEM-D211, CEM-D311, CEM-D211-MID, CEM-D311-MID)	
Protocol	Modbus
Baud Rate	9600, 19200, 38400, 57600, 115200 bps
Data bits	8
Stop bits	1
Parity	none-even-odd

M-BUS communications (CEM-D212, CEM-D312, CEM-D212-MID, CEM-D312-MID)	
Protocol	Slave M-Bus compatible with EN 13757-2 and EN 13757-3
Baud Rate	300, 600, 1200, 2400, 4800, 9600 bps
Data bits	8
Stop bits	1
Parity	none-even-odd

RTC (CEM-D211, CEM-D212, CEM-D311, CEM-D312, CEM-D211-MID, CEM-D212-MID, CEM-D311-MID, CEM-D312-MID)	
Accuracy	≤ 0.5 s/day of delay (25°C)

User interface		
Display	LCD	
Maximum counter value	CEM-D21x CEM-D21x-MID	CEM-D31x CEM-D31x-MID
	4,294,967 kWh	3,999,999 kWh
Keyboard	2 keys	
LED	CEM-D21x CEM-D21x-MID	CEM-D31x CEM-D31x-MID
	2 LED: **A**, 4000 imp/kWh **B**, 4000 imp/kvarh	2 LED: **A**, 20000 imp/kWh **B**, 20000 imp/kvarh

Environmental features	
Operating temperature	-40°C... +70 °C
Storage temperature	-40°C... +85°C
Relative humidity (non- condensation)	5 ... 95%
Maximum altitude	2000 m
Protection degree	IP51, **Terminals:** IP40
Pollution degree	2
Use	Indoor (dry environment)

Mechanical features				
CEM-D21x, CEM-D21x-MID				
Terminals			Cable type	
1... 8	≤ 25 mm²	≤ 2.5 Nm	BVR, 600V, 105°C	PH2
15... 19	≤ 1.5 mm²	-	BVR, 300V, 105°C	-
CEM-D31x, CEM-D31x-MID				
Terminals			Cable type	
1, 3, 4, 6, 7, 9	4 ... 16 mm²	≤ 1.2 Nm	BVR, 600V, 105°C	PH2
10... 13	4 ... 25 mm²	≤ 2.5 Nm	BVR, 600V, 105°C	PH2
15... 19	≤ 1.5 mm²	-	BVR, 300V, 105°C	-
Dimensions in mm	Figure 42			
Weight	CEM-D210, CEM-D210-MID		CEM-D211, CEM-D211-MID CEM-D212, CEM-D212-MID	
	0.311 kg		0.326 kg	
	CEM-D310, CEM-D310-MID		CEM-D311, CEM-D311-MID CEM-D312, CEM-D312-MID	
	0.308 kg		0.323 kg	
Enclosure	PC + ABS (V0 plastic as per UL94)			
Environment features	The meter is intended to be installed in a Mechanical Environment 'M1', with Shock and Vibrations of low significance, as per 2014/32/EU Directive. The meter is intended to be installed in Electromagnetic Environment 'E2', as per 2014/32/EU Directive.			

Standards	
Electricity metering equipment - Part 3: Particular requirements - Static meters for AC active energy (class indexes A, B and C)	UNE EN 50470-3
Electricity metering equipment - Particular requirements - Part 21: Static meters for AC active energy (classes 0,5, 1 and 2)	IEC 62053-21
Electricity metering equipment - Particular requirements - Part 23: Static meters for reactive energy (classes 2 and 3	IEC 62053-23
Electricity metering equipment (AC) - Particular requirements -- Part 52: Symbols	IEC 62053-52
Electricity metering equipment - General requirements, tests and test conditions - Part 11: Metering equipment	IEC 62052-11
EU Directive 2014/32/EU on Measuring Instruments Annex II, Module B	
RTC	
Electricity metering (a.c.) - Tariff and load control -- Part 21: Particular requirements for time switches	UNE-EN 62054-21
M-BUS communications	
Communication systems for meters - Part 1: Data exchange	UNE-EN 13757-1
Communication systems for meters - Part 2: Wired M-Bus communication	UNE-EN 13757-2
Communication systems for meters - Part 3: Application protocols	UNE-EN 13757-3

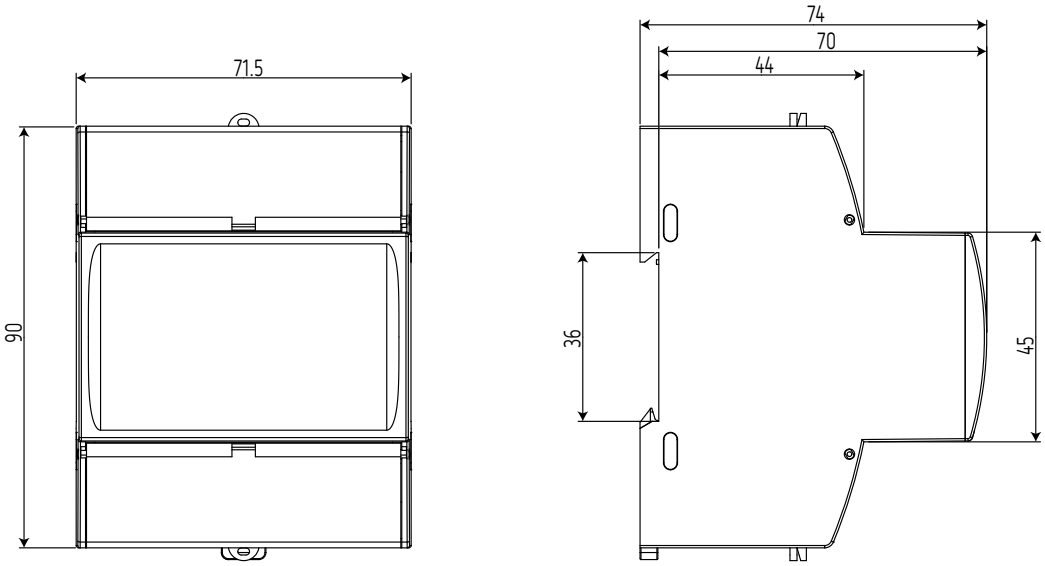

Figure 42: Dimensions of the CEM-D21x/CEM-D31x.

10.- VEDLIKEHOLD OG TEKNISK SERVICE

Ved spørsmål om enhetens drift eller ved eventuelle feil, kontakt FUNCTION AS tekniske support.

Function AS
Jørgen Kanitz gate 28, N-1337 Sandvika
(+47) 66 77 57 50
support@function.no
www.function.no

11.- REKLAMASJON

11.1. Mangler som oppdages, eller burde ha vært oppdaget, ved leveransens mottakelse, skal straks reklameres til Selger. Det skal reklameres straks mangelen oppdages. Reklamasjonen skal bekreftes skriftlig og skal inneholde oppgave over mangelens art og omfang.

11.2. Reklamerer ikke Kjøper som bestemt i pkt 11.1, til tross for at han har oppdaget mangelen eller burde ha oppdaget den, taper han retten til å påberope seg mangelen.

11.3. Erstatning for reklamert vare faktureres som vanlig ordre. Selger vil vurdere reklamasjonens berettigelse, og eventuelt utstede kreditnota på den reklamerte varens verdi eller deler av denne.

Reklamasjon gjelder følgelig ikke for feil som oppstår i følgende tilfeller:

- Overspenninger og/eller elektriske forstyrrelser i strømforsyningen
- Vannpåvirkning, dersom produktet ikke har tilstrekkelig IP-klassifisering
- Utilstrekkelig ventilasjon og/eller for høye temperaturer
- Feil installasjon og/eller manglende vedlikehold
- Reparasjoner eller modifikasjoner utført av kjøper uten produsentens godkjenning

12. - EU DECLARATION OF CONFORMITY

CIRCUTOR, S.A.U. – Vial Sant Jordi, s/n
08232 Viladecavalls (Barcelona) Spain
(+34) 937 452 900 – info@circutor.com

(ES) DECLARACIÓN UE DE CONFORMIDAD

La presente declaración de conformidad se expide bajo la exclusiva responsabilidad de CIRCUTOR con dirección en **Vial Sant Jordi, s/n – 08232 Viladecavalls (Barcelona) España**

Producto:

Contadores de energía trifásicos directo

Serie:

CEM-D210-MID, CEM-D211-MID, CEM-D212-MID
CEM-D210, CEM-D211, CEM-D212

Marca:

CIRCUTOR

EL objeto de la declaración es conforme con la legislación de armonización pertinente en la UE, siempre que sea instalado, mantenido y usado en la aplicación para la que ha sido fabricado, de acuerdo con las normas de instalación aplicables y las instrucciones del fabricante

2014/32/EU: Measuring Instrument Directive 2011/65/EU: RoHS2 Directive
2015/863/EU: RoHS3 Directive

Está en conformidad con la(s) siguiente(s) norma(s) u otro(s) documento(s) normativos(s):

EN 50470-3:2022 EN IEC 62052-11:2021/A11:2022
IEC 62052-31:2015 EN 63000:2018

(EN) EU DECLARATION OF CONFORMITY

This declaration of conformity is issued under the sole responsibility of CIRCUTOR with registered address at **Vial Sant Jordi, s/n – 08232 Viladecavalls (Barcelona) Spain**

Product:

Direct three-phase energy meters

Series:

CEM-D210-MID, CEM-D211-MID, CEM-D212-MID
CEM-D210, CEM-D211, CEM-D212

Brand:

CIRCUTOR

The object of the declaration is in conformity with the relevant EU harmonisation legislation, provided that it is installed, maintained and used for the application for which it was manufactured, in accordance with the applicable installation standards and the manufacturer's instructions

2014/32/EU: Measuring Instrument Directive 2011/65/EU: RoHS2 Directive
2015/863/EU: RoHS3 Directive

It is in conformity with the following standard(s) or other regulatory document(s):

EN 50470-3:2022 EN IEC 62052-11:2021/A11:2022
IEC 62052-31:2015 EN 63000:2018

(FR) DÉCLARATION UE DE CONFORMITÉ

La présente déclaration de conformité est délivrée sous la responsabilité exclusive de CIRCUTOR dont l'adresse postale est **Vial Sant Jordi, s/n – 08232 Viladecavalls (Barcelone) Espagne**

Produit:

mesureurs d'énergie triphasés connexion directes

Série:

CEM-D210-MID, CEM-D211-MID, CEM-D212-MID
CEM-D210, CEM-D211, CEM-D212

Marque:

CIRCUTOR

L'objet de la déclaration est conforme à la législation d'harmonisation pertinente dans l'UE, à condition d'avoir été installé, entretenu et utilisé dans l'application pour laquelle il a été fabriqué, conformément aux normes d'installation applicables et aux instructions du fabricant

2014/32/EU: Measuring Instrument Directive 2011/65/EU: RoHS2 Directive
2015/863/EU: RoHS3 Directive

Il est en conformité avec la(les) suivante (s) norme(s) ou autre(s) document(s) réglementaire (s):

EN 50470-3:2022 EN IEC 62052-11:2021/A11:2022
IEC 62052-31:2015 EN 63000:2018

Viladecavalls (Spain), 16/9/2025
Chief Executive Officer: Joan Comellas Cabeza

Circutor
NIF A-08513178
Vial Sant Jordi s/n.
08232 Viladecavalls
Barcelona (Spain)
t. +34 93 745 29 00

Circutor

CIRCUTOR, S.A.U. – Vial Sant Jordi, s/n
08232 Viladecavalls (Barcelona) Spain
(+34) 937 452 900 – info@circutor.com

(DE)

KONFORMITÄTSERKLÄRUNG UE

Vorliegende Konformitätserklärung wird unter alleiniger Verantwortung von CIRCUTOR mit der Anschrift, Vial Sant Jordi, s/n – 08232 Viladecavalls (Barcelona) Spanien, ausgestellt

Produkt:

Dreiphasen-Energiezähler direkter Anschluss

Serie:

CEM-D210-MID, CEM-D211-MID, CEM-D212-MID
CEM-D210, CEM-D211, CEM-D212

Marke:

CIRCUTOR

Der Gegenstand der Konformitätserklärung ist konform mit der geltenden Gesetzgebung zur Harmonisierung der EU, sofern die Installation, Wartung undVerwendung der Anwendung seinem Verwendungszweck entsprechend gemäß den geltenden Installationsstandards und der Vorgaben des Herstellers erfolgt.

2014/32/EU: Measuring Instrument Directive 2011/65/EU: RoHS2 Directive
2015/863/EU: RoHS3 Directive

Es besteht Konformität mit der/den folgender/folgenden Norm/Normen oder sonstigem/sonstiger Regelwerk/Regelwerken

EN 50470-3:2022 EN IEC 62052-11:2021/A11:2022
IEC 62052-31:2015 EN 63000:2018

(PT)

DECLARAÇÃO DA UE DE CONFORMIDADE

A presente declaração de conformidade é expedida sob a exclusiva responsabilidade da CIRCUTOR com morada em **Vial Sant Jordi, s/n – 08232 Viladecavalls (Barcelona) Espanha**

Producto:

Contadores de energía trifásicos ligação directa

Série:

CEM-D210-MID, CEM-D211-MID, CEM-D212-MID
CEM-D210, CEM-D211, CEM-D212

Marca:

CIRCUTOR

O objeto da declaração está conforme a legislação de harmonização pertinente na UE, sempre que seja instalado, mantido e utilizado na aplicação para a qual foi fabricado, de acordo com as normas de instalação aplicáveis e as instruções do fabricante.

2014/32/EU: Measuring Instrument Directive 2011/65/EU: RoHS2 Directive
2015/863/EU: RoHS3 Directive

Está em conformidade com a(s) seguinte(s) norma(s) ou outro(s) documento(s) normativo(s):

EN 50470-3:2022 EN IEC 62052-11:2021/A11:2022
IEC 62052-31:2015 EN 63000:2018

(IT)

DICHIARAZIONE DI CONFORMITÀ UE

La presente dichiarazione di conformità viene rilasciata sotto la responsabilità esclusiva di CIRCUTOR, con sede in **Vial Sant Jordi, s/n – 08232 Viladecavalls (Barcellona) Spagna**

prodotto:

Contatori di energia trifase diretto

Serie:

CEM-D210-MID, CEM-D211-MID, CEM-D212-MID
CEM-D210, CEM-D211, CEM-D212

MARCHIO:

CIRCUTOR

L'oggetto della dichiarazione è conforme alla pertinente normativa di armonizzazione dell'Unione Europea, a condizione che venga installato, mantenuto e utilizzato nell'ambito dell'applicazione per cui è stato prodotto, secondo le norme di installazione applicabili e le istruzioni del produttore.

2014/32/EU: Measuring Instrument Directive 2011/65/EU: RoHS2 Directive
2015/863/EU: RoHS3 Directive

È conforme alle seguenti normative o altri documenti normativi:

EN 50470-3:2022 EN IEC 62052-11:2021/A11:2022
IEC 62052-31:2015 EN 63000:2018

Viladecavalls (Spain), 16/9/2025
Chief Executive Officer: Joan Comellas Cabeza

Circutor
NIF A-08513178
Vial Sant Jordi s/n.
08232 Viladecavalls
Barcelona (Spain)
t. +34 93 745 29 00

CIRCUTOR, S.A.U. – Vial Sant Jordi, s/n
08232 Viladecavalls (Barcelona) Spain
(+34) 937 452 900 – info@circutor.com

(PL)

DEKLARACJA ZGODNOŚCI UE

Niniejsza deklaracja zgodności zostaje wydana na wyłączną odpowiedzialność firmy CIRCUTOR z siedzibą pod adresem: **Vial Sant Jordi, s/n – 08232 Viladecavalls (Barcelona) Hiszpania**

produk:

trójfazowe liczniki energii podłączenie bezpośrednie

Seria:

CEM-D210-MID, CEM-D211-MID, CEM-D212-MID
CEM-D210, CEM-D211, CEM-D212

marka:

CIRCUTOR

Przedmiot deklaracji jest zgodny z odnośnymi wymaganiami prawodawstwa harmonizacyjnego w Unii Europejskiej pod warunkiem, że będzie instalowany, konserwowany i użytkowany zgodnie z przeznaczeniem, dla którego został wyprodukowany, zgodnie z mającymi zastosowanie normami dotyczącymi instalacji oraz instrukcjami producenta

2014/32/EU: Measuring Instrument Directive 2011/65/EU: RoHS2 Directive

2015/863/EU: RoHS3 Directive

Jest zgodny z następującą(ymi) normą(ami) lub innym(i) dokumentem(ami) normatywnym(i):

EN 50470-3:2022 EN IEC 62052-11:2021/A11:2022
IEC 62052-31:2015 EN 63000:2018

Viladecavalls (Spain), 16/9/2025
Chief Executive Officer: Joan Comellas Cabeza

Circutor
NIF A-08513178
Vial Sant Jordi s/n.
08232 Viladecavalls
Barcelona (Spain)
t. +34 93 745 29 00

Circutor

CIRCUTOR, S.A.U. – Vial Sant Jordi, s/n
08232 Viladecavalls (Barcelona) Spain
(+34) 937 452 900 – info@circutor.com

(ES)

DECLARACIÓN UE DE CONFORMIDAD

La presente declaración de conformidad se expide bajo la exclusiva responsabilidad de CIRCUTOR con dirección en **Vial Sant Jordi, s/n – 08232 Viladecavalls (Barcelona) España**

Producto:

Contadores de energía trifásicos indirecto

Serie:

CEM-D310-MID, CEM-D311-MID, CEM-D312-MID, CEM-D310, CEM-D311, CEM-D312

Marca:

CIRCUTOR

EL objeto de la declaración es conforme con la legislación de armonización pertinente en la UE, siempre que sea instalado, mantenido y usado en la aplicación para la que ha sido fabricado, de acuerdo con las normas de instalación aplicables y las instrucciones del fabricante

2014/32/EU: Measuring Instrument Directive 2011/65/EU: RoHS2 Directive
2015/863/EU: RoHS3 Directive

Está en conformidad con la(s) siguiente(s) norma(s) u otro(s) documento(s) normativos(s):

EN 50470-3:2022 EN IEC 62052-11:2021/A11:2022
IEC 62052-31:2015 EN 63000:2018

(EN)

EU DECLARATION OF CONFORMITY

This declaration of conformity is issued under the sole responsibility of CIRCUTOR with registered address at **Vial Sant Jordi, s/n – 08232 Viladecavalls (Barcelona) Spain**

Product:

Indirect three-phase energy meters

Series:

CEM-D310-MID, CEM-D311-MID, CEM-D312-MID, CEM-D310, CEM-D311, CEM-D312

Brand:

CIRCUTOR

The object of the declaration is in conformity with the relevant EU harmonisation legislation, provided that it is installed, maintained and used for the application for which it was manufactured, in accordance with the applicable installation standards and the manufacturer's instructions

2014/32/EU: Measuring Instrument Directive 2011/65/EU: RoHS2 Directive
2015/863/EU: RoHS3 Directive

It is in conformity with the following standard(s) or other regulatory document(s):

EN 50470-3:2022 EN IEC 62052-11:2021/A11:2022
IEC 62052-31:2015 EN 63000:2018

(FR)

DÉCLARATION UE DE CONFORMITÉ

La présente déclaration de conformité est délivrée sous la responsabilité exclusive de CIRCUTOR dont l'adresse postale est **Vial Sant Jordi, s/n – 08232 Viladecavalls (Barcelone) Espagne**

Produit:

mesureurs d'énergie triphasés connexion indirectes

Série:

CEM-D310-MID, CEM-D311-MID, CEM-D312-MID, CEM-D310, CEM-D311, CEM-D312

Marque:

CIRCUTOR

L'objet de la déclaration est conforme à la législation d'harmonisation pertinente dans l'UE, à condition d'avoir été installé, entretenu et utilisé dans l'application pour laquelle il a été fabriqué, conformément aux normes d'installation applicables et aux instructions du fabricant

2014/32/EU: Measuring Instrument Directive 2011/65/EU: RoHS2 Directive
2015/863/EU: RoHS3 Directive

Il est en conformité avec la(les) suivante (s) norme(s) ou autre(s) document(s) réglementaire (s):

EN 50470-3:2022 EN IEC 62052-11:2021/A11:2022
IEC 62052-31:2015 EN 63000:2018

Viladecavalls (Spain), 16/9/2025
Chief Executive Officer: Joan Comellas Cabeza

Circutor
NIF A-08513178
Vial Sant Jordi s/n.
08232 Viladecavalls
Barcelona (Spain)
t. +34 93 745 29 00

CIRCUTOR, S.A.U. – Vial Sant Jordi, s/n
08232 Viladecavalls (Barcelona) Spain
(+34) 937 452 900 – info@circutor.com

(DE)

KONFORMITÄTSERKLÄRUNG UE

Vorliegende Konformitätserklärung wird unter alleiniger Verantwortung von CIRCUTOR mit der Anschrift, Vial Sant Jordi, s/n – 08232 Viladecavalls (Barcelona) Spanien, ausgestellt

Produkt:

Dreiphasen-Energiezähler indirekter Anschluss

Serie:

CEM-D310-MID, CEM-D311-MID, CEM-D312-MID, CEM-D310, CEM-D311, CEM-D312

Marke:

CIRCUTOR

Der Gegenstand der Konformitätserklärung ist konform mit der geltenden Gesetzgebung zur Harmonisierung der EU, sofern die Installation, Wartung undVerwendung der Anwendung seinem Verwendungszweck entsprechend gemäß den geltenden Installationsstandards und der Vorgaben des Herstellers erfolgt.

2014/32/EU: Measuring Instrument Directive 2011/65/EU: RoHS2 Directive
2015/863/EU: RoHS3 Directive

Es besteht Konformität mit der/den folgender/folgenden Norm/Normen oder sonstigem/sonstiger Regelwerk/Regelwerken

EN 50470-3:2022 EN IEC 62052-11:2021/A11:2022
IEC 62052-31:2015 EN 63000:2018

(PT)

DECLARAÇÃO DA UE DE CONFORMIDADE

A presente declaração de conformidade é expedida sob a exclusiva responsabilidade da CIRCUTOR com morada em **Vial Sant Jordi, s/n – 08232 Viladecavalls (Barcelona) Espanha**

Producto:

Contadores de energía trifásicos ligação indirecta

Série:

CEM-D310-MID, CEM-D311-MID, CEM-D312-MID, CEM-D310, CEM-D311, CEM-D312

Marca:

CIRCUTOR

O objeto da declaração está conforme a legislação de harmonização pertinente na UE, sempre que seja instalado, mantido e utilizado na aplicação para a qual foi fabricado, de acordo com as normas de instalação aplicáveis e as instruções do fabricante.

2014/32/EU: Measuring Instrument Directive 2011/65/EU: RoHS2 Directive
2015/863/EU: RoHS3 Directive

Está em conformidade com a(s) seguinte(s) norma(s) ou outro(s) documento(s) normativo(s):

EN 50470-3:2022 EN IEC 62052-11:2021/A11:2022
IEC 62052-31:2015 EN 63000:2018

(IT)

DICHIARAZIONE DI CONFORMITÀ UE

La presente dichiarazione di conformità viene rilasciata sotto la responsabilità esclusiva di CIRCUTOR, con sede in **Vial Sant Jordi, s/n – 08232 Viladecavalls (Barcellona) Spagna**

prodotto:

Contatori di energia trifase indiretto

Serie:

CEM-D310-MID, CEM-D311-MID, CEM-D312-MID, CEM-D310, CEM-D311, CEM-D312

MARCHIO:

CIRCUTOR

L'oggetto della dichiarazione è conforme alla pertinente normativa di armonizzazione dell'Unione Europea, a condizione che venga installato, mantenuto e utilizzato nell'ambito dell'applicazione per cui è stato prodotto, secondo le norme di installazione applicabili e le istruzioni del produttore.

2014/32/EU: Measuring Instrument Directive 2011/65/EU: RoHS2 Directive
2015/863/EU: RoHS3 Directive

È conforme alle seguenti normative o altri documenti normativi:

EN 50470-3:2022 EN IEC 62052-11:2021/A11:2022
IEC 62052-31:2015 EN 63000:2018

Viladecavalls (Spain), 16/9/2025
Chief Executive Officer: Joan Comellas Cabeza

Circutor
NIF A-08513178
Vial Sant Jordi s/n.
08232 Viladecavalls
Barcelona (Spain)
t. +34 93 745 29 00

CIRCUTOR, S.A.U. – Vial Sant Jordi, s/n
08232 Viladecavalls (Barcelona) Spain
(+34) 937 452 900 – info@circutor.com

(PL)

DEKLARACJA ZGODNOŚCI UE

Niniejsza deklaracja zgodności zostaje wydana na wyłączną odpowiedzialność firmy CIRCUTOR z siedzibą pod adresem: **Vial Sant Jordi, s/n – 08232 Viladecavalls (Barcelona) Hiszpania**

produk:

trójfazowe liczniki energii podłączenie pośrednie

Seria:

CEM-D310-MID, CEM-D311-MID, CEM-D312-MID, CEM-D310, CEM-D311, CEM-D312

marka:

CIRCUTOR

Przedmiot deklaracji jest zgodny z odnośnymi wymaganiami prawodawstwa harmonizacyjnego w Unii Europejskiej pod warunkiem, że będzie instalowany, konserwowany i użytkowany zgodnie z przeznaczeniem, dla którego został wyprodukowany, zgodnie z mającymi zastosowanie normami dotyczącymi instalacji oraz instrukcjami producenta

2014/32/EU: Measuring Instrument Directive 2011/65/EU: RoHS2 Directive

2015/863/EU: RoHS3 Directive

Jest zgodny z następującą(ymi) normą(ami) lub innym(i) dokumentem(ami) normatywnym(i):

EN 50470-3:2022 EN IEC 62052-11:2021/A11:2022
IEC 62052-31:2015 EN 63000:2018

Viladecavalls (Spain), 16/9/2025
Chief Executive Officer: Joan Comellas Cabeza

Circutor
NIF A-08513178
Vial Sant Jordi s/n.
08232 Viladecavalls
Barcelona (Spain)
t. +34 93 745 29 00

FUNCTION

Function AS
Jørgen Kanitz gate 28
N-1337 Sandvika
(+47) 66 77 57 50
support@function.no
www.function.no